www.tmracing.it

TM Racing SpA - Via Fano, 6
61122 Pesaro - ITALY
Phone: +39 0721 25113

USES AND
RACOMMENDS

2T85SMXJ23-T

TELAIO

FRAME

10/02/2023

INFORMAZIONI GENERALI

Il presente catalogo serve per richiedere con esattezza le parti di ricambio.
Nelle ordinazioni indicare:

1) Il numero di matricola del Telaio che è stampigliato sul lato destro del canotto di sterzo. Nei modelli EN, SMR, SMR il numero di matricola è riportato anche su una targhezza posta sul lato sinistro (Vedi foto).

2) il numero di serie del Motore. E' posto sulla sinitra del motore tra la leva cambio e i coperchio accensione (Vedi foto).

3) Il codice dei particolari seguito dalla descrizione.

4) Il colore per i pezzi verniciati o comunque colorati.

Le indicazioni destra e sinistra si riferiscono ai lati del veicolo rispetto al senso di marcia.

Foto e disegni sono solo a scopo informativo e potrebbero non corrispondere esattamente alle caratteristiche dei prodotti.

GENERAL INFORMATION

The present spare parts catalogue enables one to order exactly the right spare part.
When ordering specify:

1) The frame serial number. It is embossed on the right side of the steering metal tube. In the EN, SMR and SMR models, the serial number is also stated on a plate positioned on the left hand side (See photo).

2) The engine serial numer. It is located on the left side of the engine between the gear lever and the ingnition cover (See photo).

3) The part's code number followed but its description.

4) Indicate colour for painted or coulored parts.

References to right and left apply to the vehicle in therms of its direction of movement.

Photos and drawings are for informational purposes only and may not exactly match the characteristics of the products.

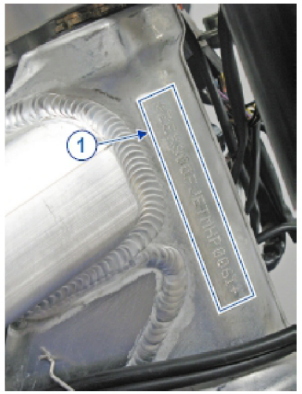

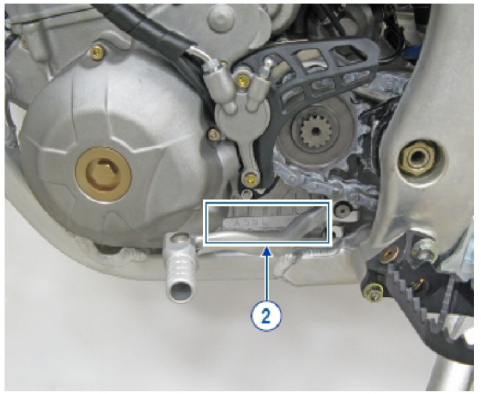

NOTE – LEGENDA

MY	NOVITA' INTRODOTTA DIFFERENTE O NON PRESENTE NEL MODELLO DELL'ANNO PRECEDENTE *PART DIFFERENT OR NOT PRESENT IN THE REVIOUS YEAR MODEL*
5M	MOTORE CON CAMBIO A 5 MARCE *ENGINE WITH 5 GEARS SPEED*
6M	MOTORE CON CAMBIO A 6 MARCE *ENGINE WITH 6 GEARS SPEED*
KS	MOTORE CON SOLO KICK STARTER *ENGINE WITH KICK STARTER ONLY*
ES	MOTORE CON AVVIAMENTO ELETTRICO *ENGINE WITH ELECTRIC STARTER*
X	RICAMBIO NON DISPONIBILE ALLA VENDITA *PART CAN NOT BE SOLD SEPARATELY*

Le illustrazioni riportate in questo manuale sono fornite solo come riferimento e possono variare dal prodotto effettivo,

Dati indicativi soggetti a modifiche senza impegno di preavviso.

The illustrations in this manual are for reference only and may vary from the actual product.

All data are subject to modification without prior notice.

2T85SMXJ23-T
TELAIO - FRAME

MANUBRIO - HANDLEBAR 4
FRENO ANTERIORE - FRONT BRAKE 6
FORCELLA MUPO - FRONT FORK MUPO 8
FORCELLA FORMULA - FRONT FORK FORMULA 11
RUOTA ANTERIORE - FRONT WHEEL 14
IMPIANTO RAFFREDDAMENTO - RADIATOR 16
SERBATOIO - FUEL TANK 18
TELAIO - FRAME 20
SELLA E PLASTICHE - SEAT AND PLASTIC 22
FILTRO ARIA - AIR FILTER 24
FORCELLONE - SWINGARM 26
LEVERAGGI - LINKAGE 28
RUOTA POSTERIORE SMX - REAR WHEEL SMX 30
FRENO POSTERIORE - REAR BRAKE 32
SCARICO - EXHAUST SYSTEM 35
KIT ADESIVI - STICKERS KIT 37
- 39

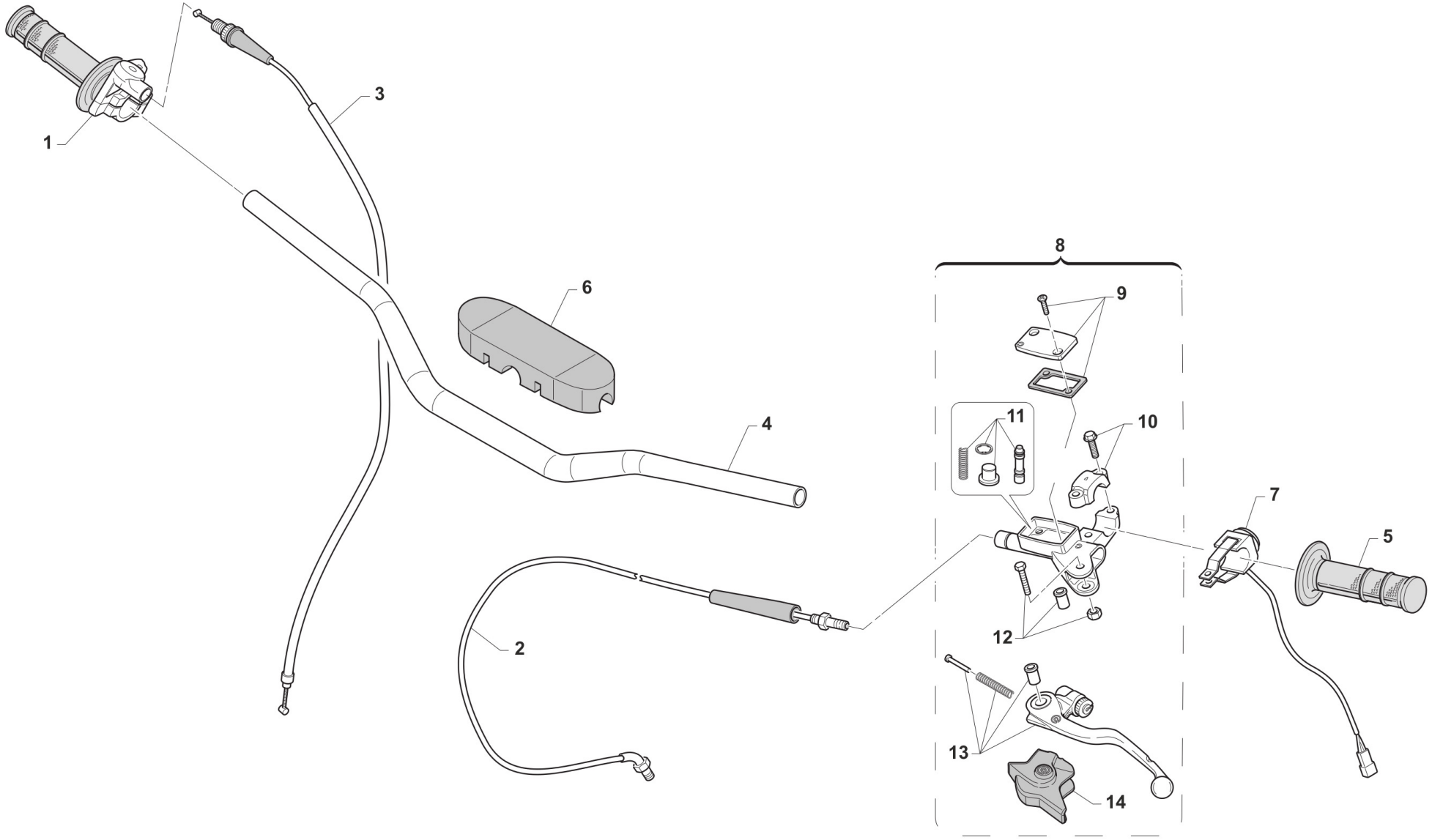
1
2
3
4
5
6
7
8
9
10
11
12
13
14
TM0106

1	64017	1		COMANDO GAS DOMINO MOD. 99->	THROTTLE ASSY DOMINO 2S 99/->
2	35270.13	1		TUBO FRIZ. IDR. 85J M.13/-> WH	HYDR.CLUTCH HOSE 85J M.13->
3	64040	1		CAVO GAS JUNIOR M.13->	THROTTLE CABLE JUNIOR 13
4	64086	1		MANUBRIO TECLIN 85J + MB M.13/->	
5	64010	1		MANOPOLE COPPIA PRO-GRIP GRI.AZZ.BLU	GRIPS, PRO-GRIP
6	64078.1	1		PARACOLPI MANUBRIO TM 2013 NR	PROTECTION FOR HANDLEBAR TM BLACK
7	68068	1		PULSANTE DI MASSA 85cc J13	SWITCH, ENGINE STOP 85cc 13/->
8	64240	1		POMPA FRIZIONE BREMBO	CLUCTH MASTER CYLINDER BREMBO
9	64247	1		COPERCH./MEMBRAN.P.FRIZ.BREMBO	COVER/RUBBER CLUTCH MAST.CYL.
10	64249	1		CAVALLOTTO POMPA FRIZIONE BREM	HOLDER CLUTCH MASTER CY.BREMBO
11	64243	1		FLOTTANTE POMPA FRIZ. BREMBO 64240	CYLINDER AND RUBBER MASTER CYL.CLUTCH BREMBO
12	64245	1		PERNO LEVA POMPA FRIZ. BREMBO	PIN
13	64241	1		LEVA FRIZIONE BREMBO RICAMBIO	LEVER, CLUTCH BREMBO
14	64238	1		PARAPOLVERE POMPA FRIZIONE BR.	DUST SEAL,CLUTCH MASTER CYL.BR

FRENO ANTERIORE
FRONT BRAKE

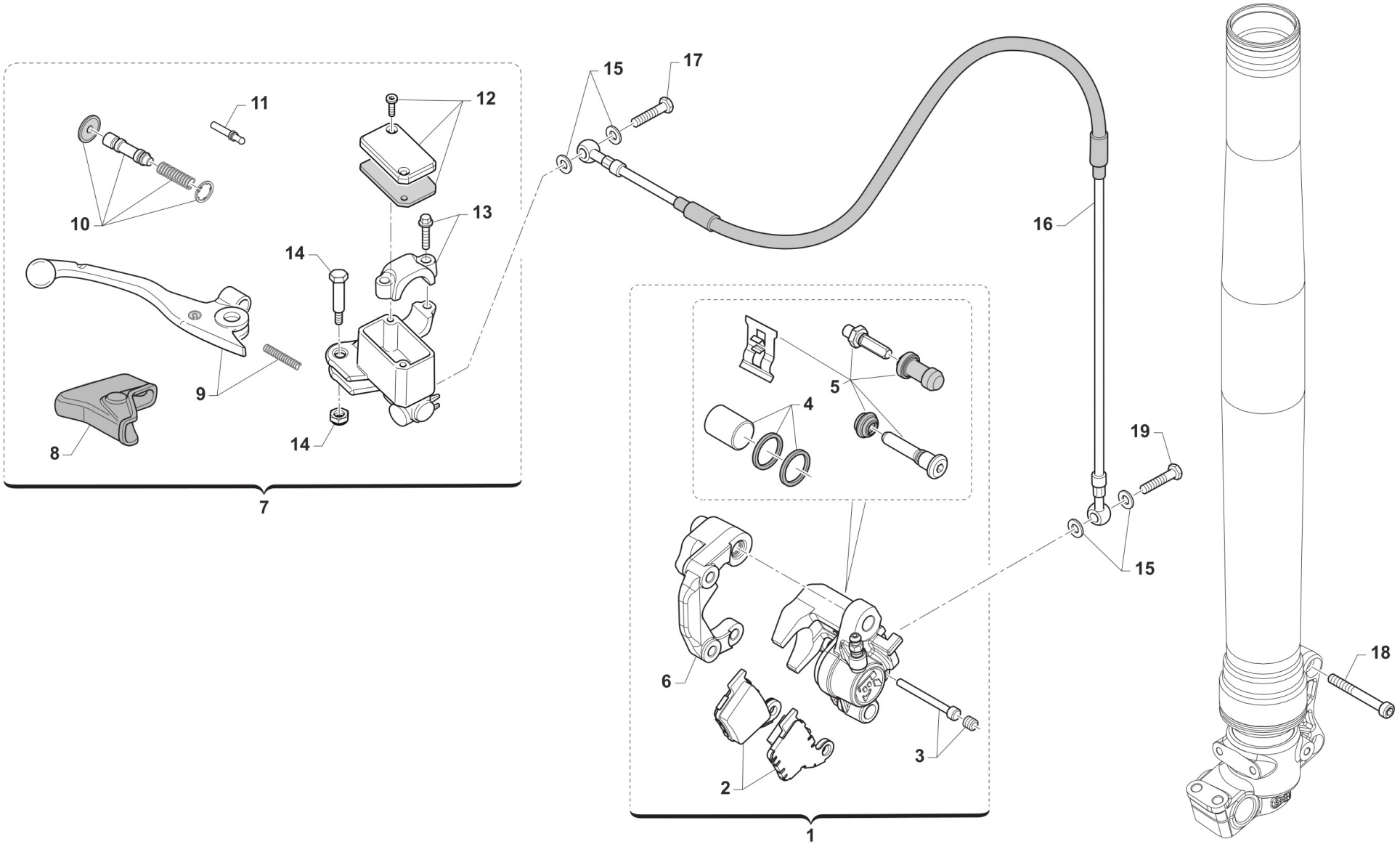

TM0107

1	69236	1		PINZA FRENO ANTERIORE J M13->	BRAKE CALIPER, FRONT JUNIOR
2	69247	1		PASTIGLIE ANT. / POST. JUNIOR M.13->	PAD KIT, F.&R. CALIPER J 13
3	69280	1		PERNO + GRANO PAST. ANT/POST BRAKING JUNIOR	PIN+GRUB ANT/POST BRAKING JUNIOR
4	ND	1		NON DISPONIBILE	TEMPORARILY NOT AVAILABLE
5	69254	1		KIT VITI + CUFFIE + LAMIERINO PINZA ANT/POST BRAKING JUNIOR	BOLT+RETAINER BRAKE PAD ANT/POST JUNIOR
6	69343	1		SUPPORTO PINZA ANT BRAKING J13	HOLDER, FRONT BRAKE CALIPER
7	69248	1		POMPA FRENO ANT PS10/16 BREMBO (opt.JUNIOR)	FRONT MASTER CYLINDER PS 10/16 BREMBO
8	69363	1		CAPPUCCIO POMPA FRENO ANT PS10/16	RUBBER FRONT MASTER CYLINDER BREMBO
9	69357	1		LEVA FRENO ANT BR. X 69248	BRAKE FRONT LEVER BREMBO X 69248
10	69358	1		KIT FLOTTANTE POMPA FREN.69248	CYLINDER AND RUBBER KIT 69248
11	69364	1		PUNTALINO POMPA FRENO ANT PS10/16	PUSH ROD
12	69368	1		TAPPO POMPA FRENO BREMBO 69248	CAP
13	69362	1		CAVALLOTTO POMPA FRENO ANT PS10/16	HOLDER
14	69365	1		PERNO LEVA POMPA FRENO ANT PS10/16	PIN, LEVER
15	69034	4		RONDELLA X BULLONE FREN B22001	WASHER B22001, BRAKE HOSE
16	69246	1		TUBO FRENO ANT 85J + MB M. 13/->	HOSE, FRONT BRAKE 85J M. 13->
17	69093	1		BULLONE 10X1 TUBO FRENO BREMBO 03	HOLLOW SCREW M10X1 BREMBO BR.
18	49501	2		VITE TCEI 8X25 UNI 5931	BOLT TCEI 8X25
19	69094	1		BULLONE 10X1.25 T.FRENO NISSIN 03	BOLT,10X1,25 BRAKE HOSE NISSIN

FORCELLA MUPO
FRONT FORK MUPO

MUPO 38

Note
Easy start (n.29) available only the Black Fork Protection.

Nota
Easy start (n.29) disponibile solo nelle protezioni Nere.

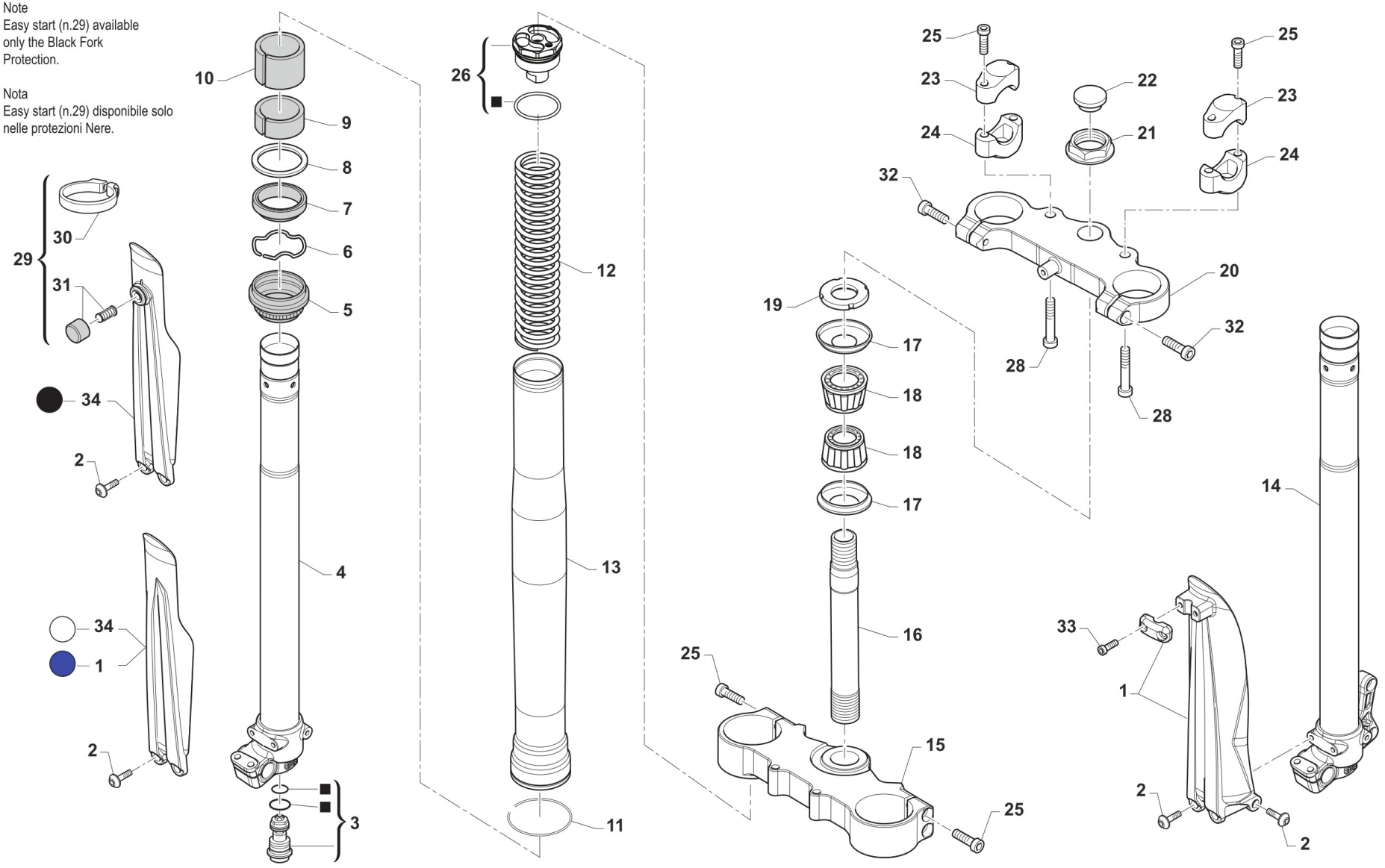

0108.22

1	67302	1		KIT PROTEZ.FORC.JUN'13 CPL BLU CON PASSACAVO	FORK PROT. ASSY JUN'13 BLU
1	67315	1		KIT PROTEZ.FORC.JUN'13 CPL BNC CON PASSACAVO	GUARD, JUNIOR FORK WHITE
2	49571	4		VITE TBCE 6x 7 PROT. FORCELLA	BOLT TBCE 6x7
3	72267	2		ASSIEME PORTA PIST.COMPL.FORC. MUPO	REBOUND ADJUSTER MUPO 38
4	72285	1		GRUPPO TUBO FORZA DX MUPO D.39	
5	72261	2		PARAPOLVERE FORCELLA MUPO 38	DUST SEAL MUPO 38
6	72265	2		ANELLO DI ARRESTO FORC. MUPO	RING MUPO 38
7	72260	2		PARAOLIO FORCELLA MUPO 38	OIL SEAL MUPO 38
8	72264	2		RONDELLA PARAOLIO FORC. MUPO	WASHER, OIL SEAL, MUPO
9	72262	2		BOCCOLA DU FORCELLA MUPO 38x42x12	BUSHING MUPO 38x42x12
10	72263	2		BOCCOLA DU FORCELLA MUPO 38x36x20	BUSHING MUPO 38x36x20
11	72266	2		ANELLO SEEGER FORC. MUPO	CIRCLIP, PROTECION, MUPO 38
12	ND	2		NON DISPONIBILE	TEMPORARILY NOT AVAILABLE
13	72284	2		FODERO FORCELLA MUPO USD D.39	
14	72286	1		GRUPPO TUBO FORZA SX MUPO D.39	
15	72118	1		PIASTRA INF.FORC 85J 13/-> F39	FORK BRIDGE, BOTTOM 85J 13->
16	72097	1		CANOTTO STERZO 85J M. 13/->	STEERING STEM, JUNIOR MY13
17	72002.01	2		PROTEZ. CUSC/CANOTTO STERZO JUN.13 ->	DUST SEAL, STEERING STEM J13->
18	03072	2		CUSCINETTO CONICO STERZO J '13	BUSH, STEERING JUNIOR 11/->
19	72099	1		GHIERA CANNOTTO STERZO J. 2011	NUT, STEERING BEARING 85J 11->
20	72119	1		PIASTRA SUP.FORC 85J 13/-> F39	FORK TRPLE CLAMP 85J 13->
21	72098	1		DADO CANOTTO STERZO 85J 13/->	NUT, STEERING BEARING 85J 13->
22	21033	1		TAPPO PLAST.D25 -CANOT.STER.EN	PLASTIC CAP D.25mm STEER. AXE
23	72036.11	2		CAVALLOTTO SUP.M.11 SILVER	UPPER HANDLEBAR M.11 SILVER
24	72124	2		CAVALLOTTO INF. 85J M.13/->	LOWER HANDLEBAR 85J M.13->
25	49502	8		VITE TCEI 8X30	BOLT TCEI 8X30
26	72268	2		TAPPO CARTUCCIA COMPL.FORC. MUPO	TOP CAP MUPO 38
28	49758	2		VITE TCEI 10X30	BOLT TCEI 10X30

29	72163	1		KIT EASY START F39 JUN'13	EASY START SYSTEM JUNIOR 13->
30	72131	1		ANELLO SIST PART FAC. JUN'13	RING, EASY START SYSTEM JUNIOR 13->
31	72137	1		BOTTONE PART.EASYSTART J13 CPL	BUTTON, EASY START 85J M.13->
32	49501	2		VITE TCEI 8X25 UNI 5931	BOLT TCEI 8X25
33	49474	2		VITE TCEI 5X16 UNI 5931	BOLT TCEI 5X16
34	67330	1		KIT PROTEZ.FORC.JUN'13 CPL NERO CON PASSACAVO	FORKS PROTECTIONS JUNIOR MY13-> BLACK
35	67315	1		KIT PROTEZ.FORC.JUN'13 CPL BNC CON PASSACAVO	GUARD, JUNIOR FORK WHITE

FORCELLA FORMULA
FRONT FORK FORMULA

FORMULA 39

Note
Easy start (n.29) available only with the White or Black fork protection.

Nota
Easy start (n.29) disponibile solo nelle protezioni Bianche o Nere.

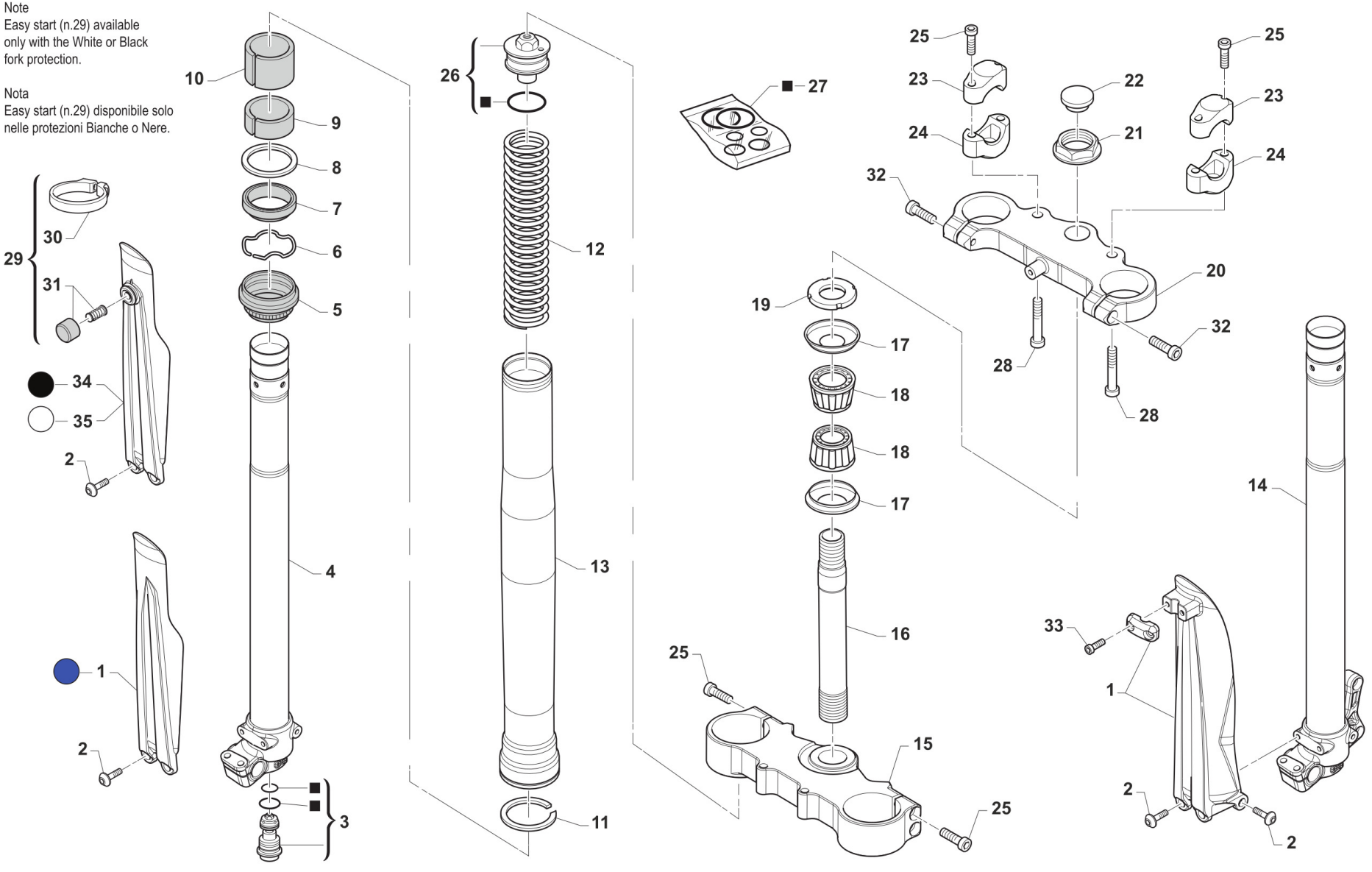

0108.01

1	67302	1	BLU	KIT PROTEZ.FORC.JUN'13 CPL BLU CON PASSACAVO	FORK PROT. ASSY JUN'13 BLU
1	67315	1	BIANCO	KIT PROTEZ.FORC.JUN'13 CPL BNC CON PASSACAVO	GUARD, JUNIOR FORK WHITE
2	49571	4		VITE TBCE 6x 7 PROT. FORCELLA	BOLT TBCE 6x7
3	72257	2		GRUPPO COMPRESSIONE FORC. FORMULA D.39	
4	72198	1		GRUPPO TUBO FORZA DX FORM.J85	
5	72151	2		PARAPOLVERE FORCELLA JUNIOR 13	DUST SEAL JUNIOR FRONT FORK
6	72152	2		ANELLO FERMA PARAOLIO FORC.J13	RING OIL SEAL RETAINER FORK J.
7	72150	2		PARAOLIO FORCELLA JUNIOR 2013	OIL SEAL JUNIOR FRONT FORK
8	72153	2		RONDELLA FERMA BOCC.PARAOL.J13	WASHER, BUSH F39 J
9	72154	2		BOCCOLA DU 39X43X15 FORC.JU.13	BUSH DU 39X43X15 FORKS 85J
10	72155	2		BOCCOLA DU 38X40X20 FORC.JU.13	BUSH DU 38X40X20 FORKS 85J
11	72255	2		ANELLO DI PROTEZIONE FORMULA D.39	
12	72156	2		MOLLA FORCELLA F39 J13 K=3.4	SPRING, FR FORK F39 J13 K=3.4
12	72157	2		MOLLA FORCELLA F39 J13 K=3.8	SPRING, FR FORK F39 J13 K=3.8
12	72158	2		MOLLA FORCELLA F39 J13 K=4.0	SPRING, FR FORK F39 J13 K=4.0
12	72161	2		MOLLA FORCELLA F39 J13 K=3.6	
13	72140	2		FODERO FORCELLA FORMULA USD D.39	
14	72197	1		GRUPPO TUBO FORZA SX FORM.J85	
15	72118	1		PIASTRA INF.FORC 85J 13/-> F39	FORK BRIDGE, BOTTOM 85J 13->
16	72097	1		CANOTTO STERZO 85J M. 13/->	STEERING STEM, JUNIOR MY13
17	72002.01	2		PROTEZ. CUSC/CANOTTO STERZO JUN.13 ->	DUST SEAL, STEERING STEM J13->
18	03072	2		CUSCINETTO CONICO STERZO J '13	BUSH, STEERING JUNIOR 11/->
19	72099	1		GHIERA CANNOTTO STERZO J. 2011	NUT, STEERING BEARING 85J 11->
20	72119	1		PIASTRA SUP.FORC 85J 13/-> F39	FORK TRPLE CLAMP 85J 13->
21	72098	1		DADO CANOTTO STERZO 85J 13/->	NUT, STEERING BEARING 85J 13->
22	21033	1		TAPPO PLAST.D25 -CANOT.STER.EN	PLASTIC CAP D.25mm STEER. AXE
23	72036.11	2		CAVALLOTTO SUP.M.11 SILVER	UPPER HANDLEBAR M.11 SILVER
24	72124	2		CAVALLOTTO INF. 85J M.13/->	LOWER HANDLEBAR 85J M.13->

25	49502	8		VITE TCEI 8X30	BOLT TCEI 8X30
26	72166	2		GRUPPO TAPPO SUP.FORC.FORM.J85	CAP, UPPER FORK FORMULA 85 J
27	72256	1		GRUPPO RICAMBI OR E RONDELLE FORM. D.39	
28	49758	2		VITE TCEI 10X30	BOLT TCEI 10X30
29	72163	1		KIT EASY START F39 JUN'13	EASY START SYSTEM JUNIOR 13->
30	72131	1		ANELLO SIST PART FAC. JUN'13	RING, EASY START SYSTEM JUNIOR 13->
31	72137	1		BOTTONE PART.EASYSTART J13 CPL	BUTTON, EASY START 85J M.13->
32	49501	2		VITE TCEI 8X25 UNI 5931	BOLT TCEI 8X25
33	49474	2		VITE TCEI 5X16 UNI 5931	BOLT TCEI 5X16
34	67330	1		KIT PROTEZ.FORC.JUN'13 CPL NERO CON PASSACAVO	FORKS PROTECTIONS JUNIOR MY13-> BLACK
35	67315	1		KIT PROTEZ.FORC.JUN'13 CPL BNC CON PASSACAVO	GUARD, JUNIOR FORK WHITE

RUOTA ANTERIORE
FRONT WHEEL

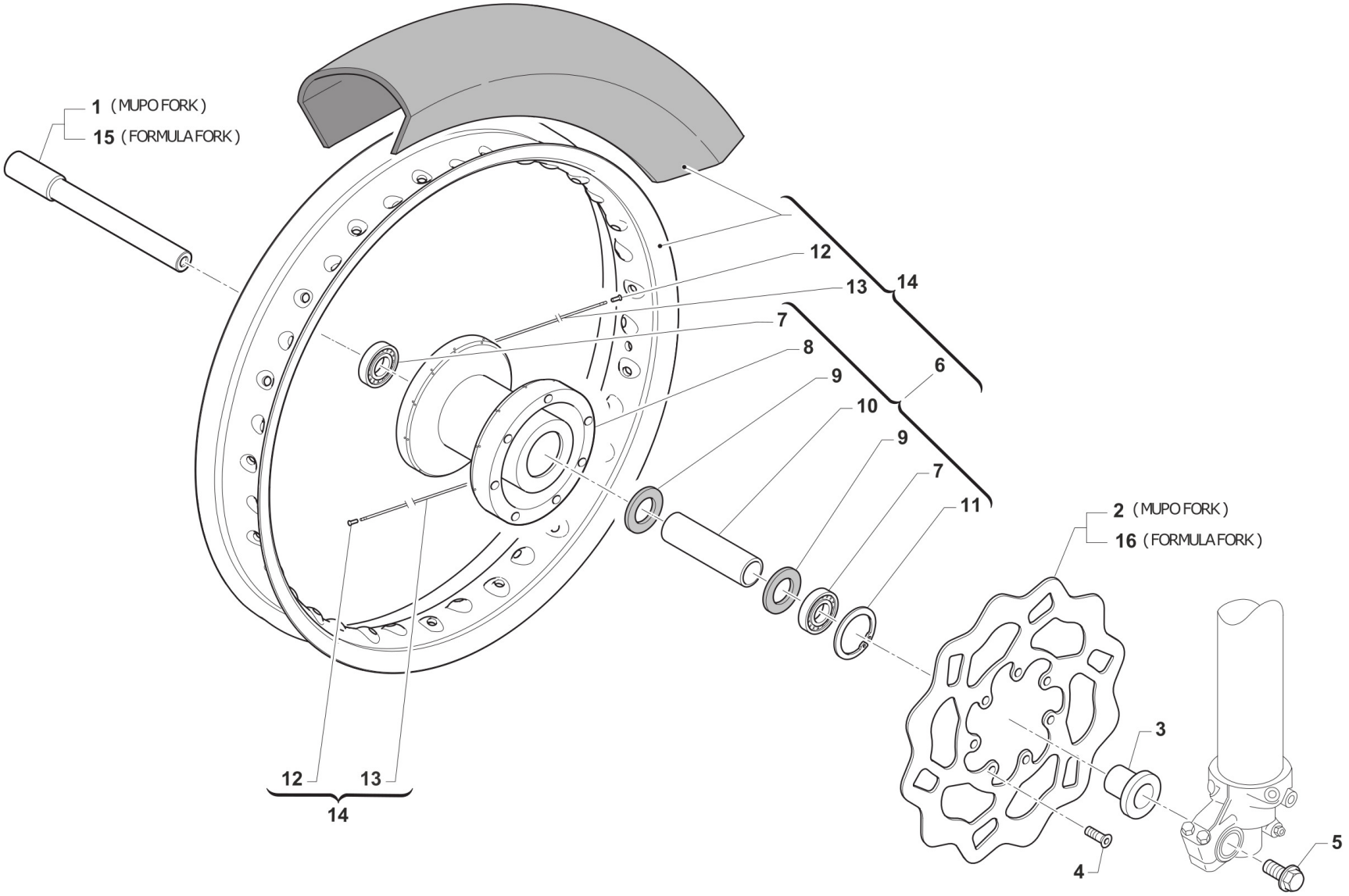

110.01

1	74060	2		PERNO RUOTA ANT JUNIOR 20-17X200 FORC. MUPO	AXLE, FRONT WHEEL, JUNIOR, MUPO 38
2	69307	1		DISCO FRENO 240X3 ANT J '18 MM - FORC. MUPO	BRAKE DISK, FRONT, JUNIOR, MUPO 38
3	26144	1		BOCCOLA CUSC.R.ANT.J13 15 F.17	BUSH, FRONT WHEEL BEA.J 15 H17
4	49370	7		VITE TE F/R 6X12	BOLT 6X12
5	49084	1		DADO PERNO R.ANT 85 J M. 13/->	NUT, AXLE FRONT WHEEL 85J 13->
6	70221	1		MOZZO ANT 80/85J 13/-> CPL	FRONT HUB ASSY, JUNIOR
7	03062	2		CUSCIN.RUOTA ANT.LATO FRE.6003	BUSH, FRONT WHEEL BRAKE SIDE
8	70221.1	1		MOZZO ANT 80/85J 13/-> NUDO	HUB, FRONT
9	12062	1		O RING DISTANZIALE RUOTA JUNIOR M.13->	O-RING SPACER WHEEL JUNIOR MY 13->
10	70231	1		DIST.INTERNO RUOTA ANT. JUNIOR M.13->	INNER SPACER FRONT WHEEL J. M.13->
11	49261	1		SEEGER MOZZO FORC.45/50/BS I35	SEEGER, FRONT WHEEL HUB I35
12	70313	28		NIPPLO ACCIAIO 3 (85 SMX)	NIPPLE 3MM
13	70310	28		RAGGIO R.ANT 85 SMX 128 X 3.0	SPOKE, FRONT SMX-J
14	70239.1	1		RUOTA ANT.CPL.JUNIOR 1213 C/G SMX, COMPLETA DI GOMMA MONTATA	WHEEL, FRONT, SMX-J ASSY WITH TYRE 12
15	74058	1		PERNO R.ANT. JUN2013 20-17X209	AXLE, FR WHEEL 85J M.13
16	69306	1		DISCO FRENO 220X3 ANT J '17 MM	BRAKE DISK, FRONT 220x3 JUNIOR

IMPIANTO RAFFREDDAMENTO
RADIATOR

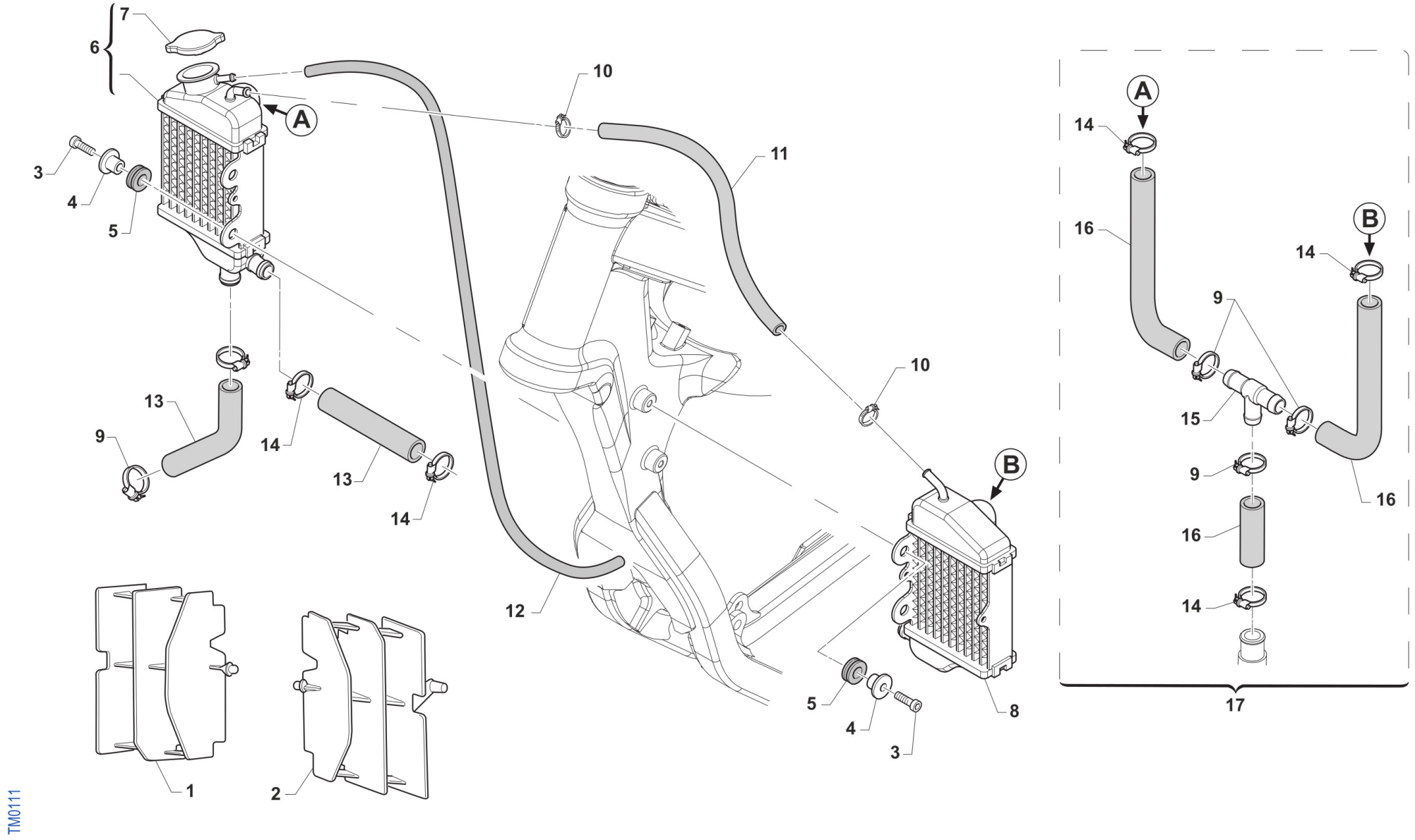

IMPIANTO RAFFREDDAMENTO
RADIATOR

1	23016	1		PROT. RADIATORE DX 80J 45333	GUARD, RADIATOR RIGHT 80J
2	23017	1		PROT. RADIATORE SX 80J 45332	GUARD, RADIATOR LEFT 80J
3	49484	4		VITE TCEI 6X20	BOLT TCEI 6X20
4	26064	4		BOCCOLA RADIATORE MY 02 / 06 ->	BUSH, RADIATOR M.02/06
5	21102	4		GOMMINO ANTIV.RADIAT.SILENZ. MY 94->	RUBBER, GROMMET RADIATOR and SILENC.
6	23067	1		RADIATORE 2T DX JUN MY19 FA L.TAP	RADIATOR RH JUNIOR
7	23062	1		TAPPO RADIATORE 1,8 BASSO(PER RADIATORE 23065)	RADIATOR CAP 1,8
8	23068	1		RADIATORE 2T SX JUN MY19 FA	RADIATOR LH JUNIOR
9	51036	4		FASCETTA A COLLARE DIAM.24 ZN	CLIP, WATER HOSE, d.24 ZN
10	51014	2		FASCETTA INOX 9 - 14 H5 IMBUT	BAND, INOX 9-14 H5 IMBUT
11	67036	1		TUBO ANTIBENZINA 8 x 14	HOSE, OIL/FUEL 8x14
12	67170	1		TUBO COPOLAN GRIGIO 5x9 mm	HOSE, COPOLAN GREY 5x9 mm
13	21020	1		MANICOTTO ACQUA LUNGO 90	HOSE, RUBBER 90cms
14	51062	5		FASCETTA A COLLARE DIAM.22 ZN	CLIP, WATER HOSE, d.22 ZN
15	21071	1		Raccordo a T radiatori Junior 2019	JOINT, RADIATOR JUNIOR
16	F21413.1	2		MANICOTTO ACQUA RADIATORE 05->	WATER HOSE RADIATOR M.2005
17	21122.19	1		MANICOTTO COLL. TESTA A RAD DX E SX 85J	HOSES KIT WATER, HEAD TO COOLER 85J

SERBATOIO
FUEL TANK

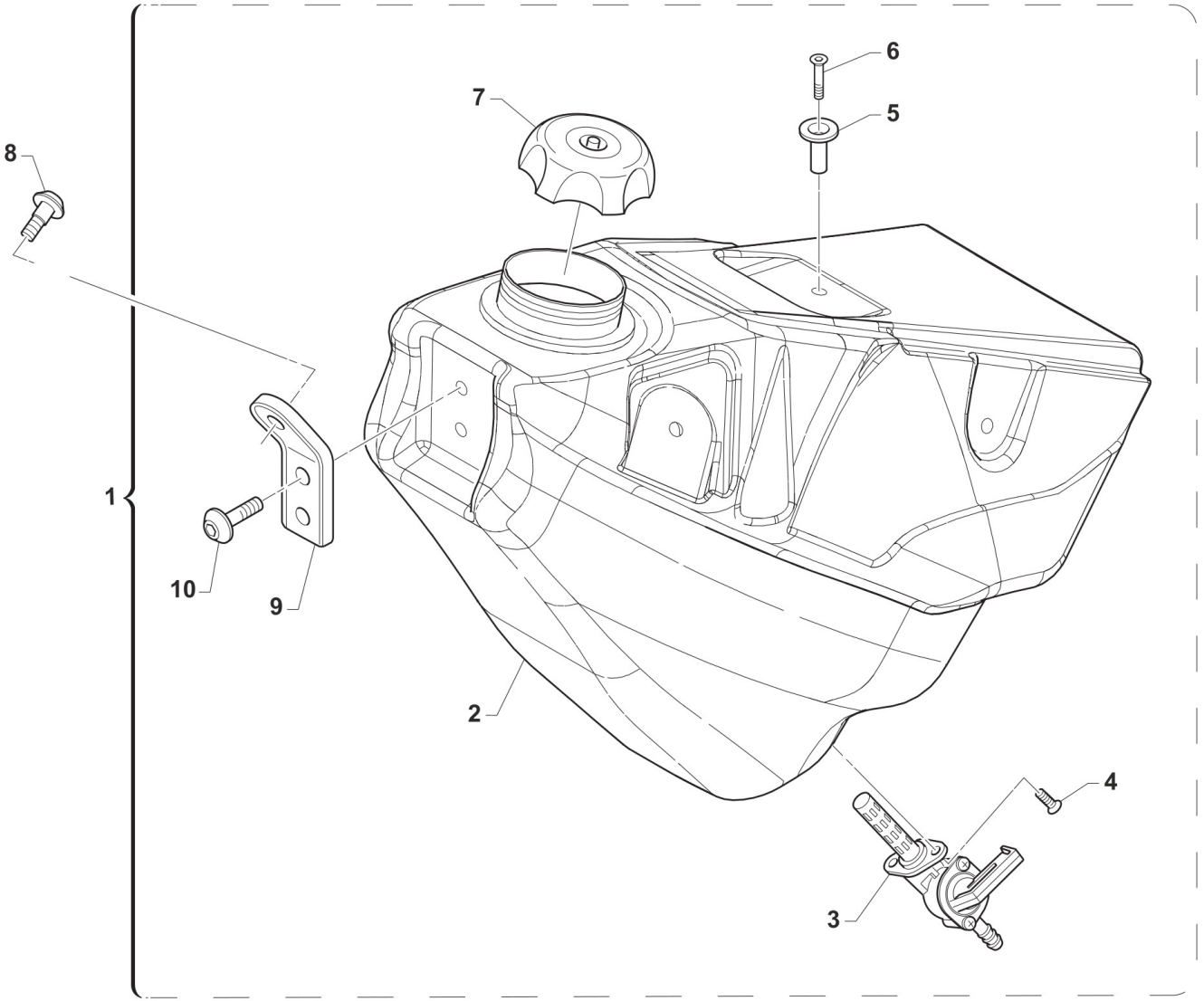

TM0112

SERBATOIO
FUEL TANK

1	67320	1		SERBATOIO 85J COMPLETO M.13/-> PLASTICA	FUEL TANK ASSY, JUNIOR
2	67311	1		SERBATOIO 85J M.13/-> PLASTICA	FUEL TANK 85J M.13->
3	65005	1		RUBINETTO BENZINA DIRITTO J-13/ carb 2022	FUEL COCK J13->
4	49435	2		VITE TE 5X12	SCREW TE 5X12
5	26083	1		BOCCOLA FISS.SELLA/SERBAT. M08	BUSH, FIX SEAT / TANK M.08->
6	49404	1		VITE TSEI 6X16	BOLT TSEI 6x16
7	65009	1		TAPPO SERBATOIO PICC.98-07/ 15	CAP, FUEL TANK M.98/07
8	F49822	1		VITE ES.FLANG.M6X12 T.AL.M08	BOLT, 6X12 AL. FRAME M.08->
9	26082	1		PIASTRINO PL.SERBATOIO M 08/10	PLASTIC PLATE TANK M.08->10
10	49574	2		VITE TBCE 6X12 PROT.FORCELLA	BOLT TBCE 6x12

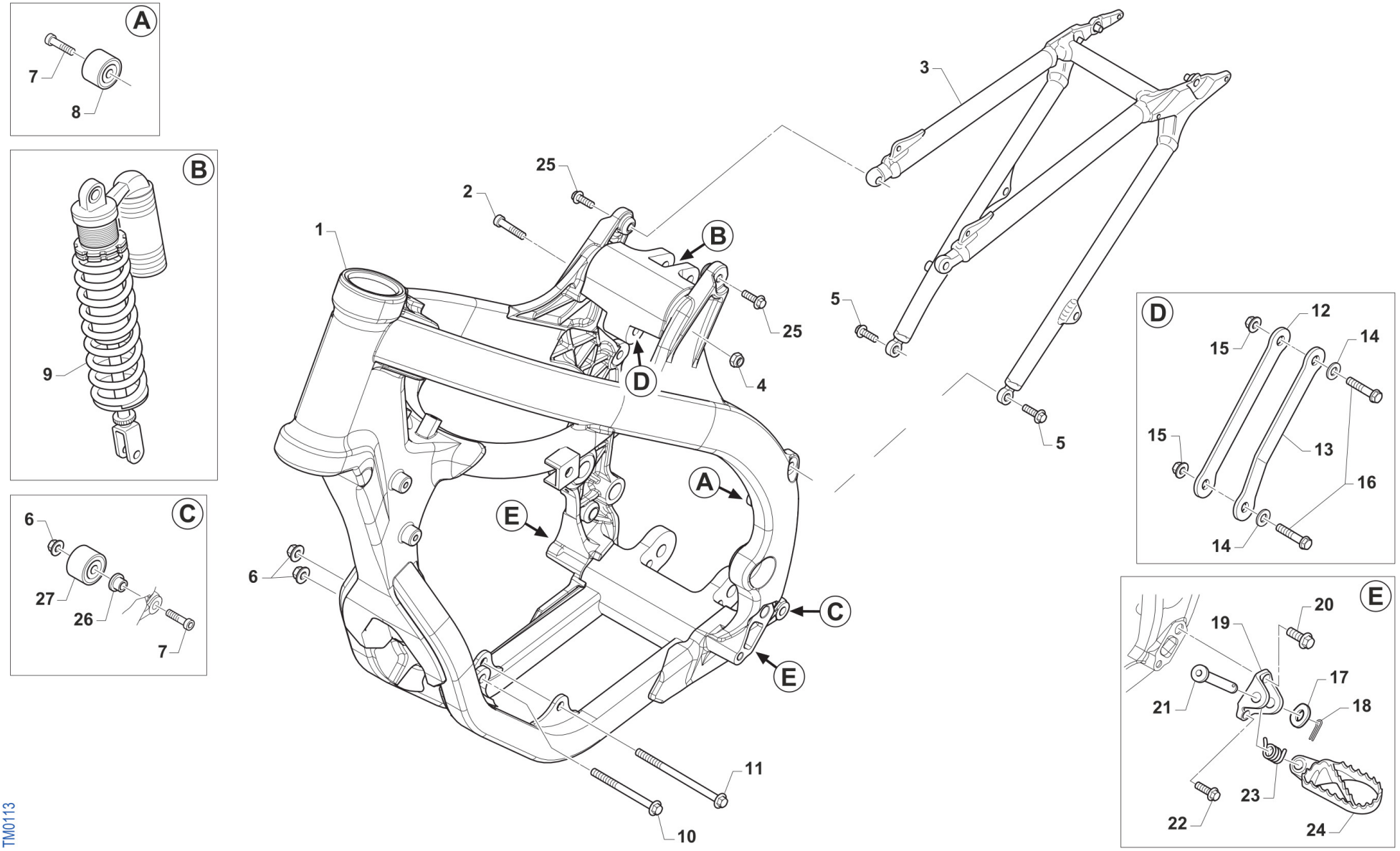
A
7
8
B
9
C
6
27
26
7
1
2
25
B
25
4
D
3
5
5
A
E
6
C
E
11
10
D
12
15
14
15
13
16
14
E
20
19
17
21
18
23
22
24
TM0113

1	73000.13	1		TELAIO MOTO 80/85/100 AL J13	FRAME JUNIOR MY13
2	49792	1		VITE TE F/R 10X54 1.25 T.AL08	BOLT, M10X1.25X54 ALU.FRAME08
3	73002.12	1		CODINO TELAIO 85 JUNIOR M. 13	REAR SUBFRAME 85J M.13->
4	49681	1		DADO M 10 X 1,25 CH 14 FLANG. AUTOBLOCK	NUT M10x1,25 FLANGED SELF-LOCK
5	49724	2		VITE TE F/R 8X21	BOLT TE F/R 8x21
6	49680	3		DADO M 8 X 1,25 CH 12 FLANG. AUTOBLOCK	NUT, M 8X1,25 FLANG. SB
7	49366	2		VITE TE F/R 8X40 Ch.10	BOLT 8X40 T.10mm
8	67088	1		ROTELLA CATENA M. 90/07	CHAIN ROLLER M.90/07
9	72132	1		AMMORTIZZATORE EXTREMETECH J13	SHOCK ABSORBER EXTREMETECH J13
10	49353	1		VITE TE F/R 8X90 1.25 Ch.10	SCREW TE F/R 8X90 1.25 Ch.10
11	49354	1		VITE TE F/R 8X120 1.25 Ch.10	SCREW TE F/R 8X120 1.25 T.10
12	26228	1		PIASTRA TIRANTE 85/100 J DX MY 13/20	PLATE RH, CYLINDER/FRAME 85-100 J
13	26229	1		PIASTRA TIRANTE 85/100 J SX MY 13/20	PLATE LH, CYLINDER/FRAME 85-100 J
14	49611	2		RONDELLA ACCIAIO 8	WASHER STEEL 8mm
15	49680	2		DADO M 8 X 1,25 CH 12 FLANG. AUTOBLOCK	NUT, M 8X1,25 FLANG. SB
16	49445	2		VITE TE 8X50 UNI 5737	BOLT EH 8X50
17	49612	2		RONDELLA ACCIAIO 10	STEEL WASHER 10
18	73036	2		COPIGLIA PEDANA M. 92/01	COTTER PIN FOOTPEG 92/01
19	00692	2		PIASTRINO TELAIO AL.ATT.PED.08	HOLDER, FOOTPEGS, M. 08/->
20	49382	2		VITE ESAG.FLANG.M12X25 T.A.	BOLT 12 X 25 FLANGE
21	73064	2		PERNO PEDANE M.08-> X T.ALLUM.	PIN, FOOT PEG, 08/->
22	49383	2		VITE ESAG.FLANG.M8X1.25X20 T.A	BOLT 8 X 20 FLANGE
23	16022	2		MOLLA RITORNO PEDANE M.08/->	SPRING, FOOT PEG PIN 08/->
24	73048.10	1		PEDANA DX MOD. 2010	FOOTPEG, RIGHT M.10->
24	73049.10	1		PEDANA SX MOD. 2010	FOOTPEG, LEFT M.10->
25	49364	2		VITE TE F/R 8X25 Ch.10	BOLT, EH 8X25 To.10 mm
26	26141	1		BOCCOLA ROTELLA CATENA.JUN'13	BUSH, CHAIN WHEEL JUNIOR 13->
27	67088.08	1		ROTELLA CATENA M. 08/->	CHAIN ROLLER 08/->

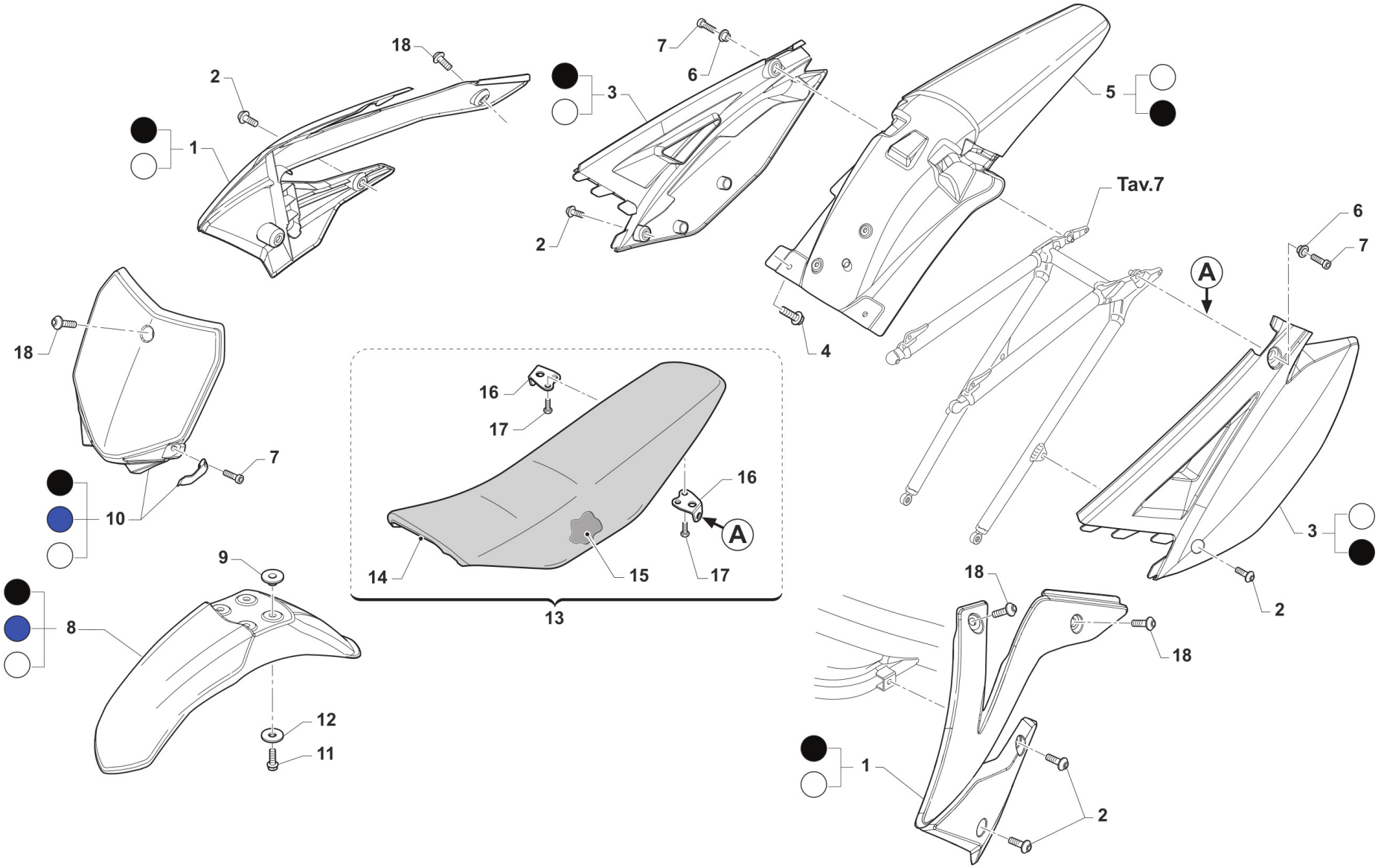
18
2
1
7
6
3
2
5
Tav.7
6
7
A
4
18
7
10
16
17
16
A
14
15
17
13
9
8
12
11
18
18
1
2
2
3

0114.02

1	67321	1		SET CONV. ARIA 2T 85 J MY 2013/2020 BIANCHI	SHROUD SET, RADIATOR, JUNIOR MY13 - WHITE
1	67375	1		SET CONV. ARIA 85J 2013/2022 NERI	
2	49574	7		VITE TBCE 6X12 PROT.FORCELLA	BOLT TBCE 6x12
3	67322	1		SET LAT P.NUM 2T 85 J MY 2013/2020 BIANCHI	SIDE PANELS SET, REAR, JUNIOR MY13 - WHITE
3	67376	1		SET LAT P.NUM 85J 2013/2022 NERI	
4	49356	2		VITE TE F/R 6X20 Ch.8	BOLT 6X20 T.8
5	67308	1		PARAFANGO POSTERIORE JUNIOR'13 BNC	MUDGUARD REAR JUNIOR 13->
5	67328	1		PARAFANGO POSTERIORE JUNIOR'13 NERO	REAR MUDGUARD JUNIOR MY13-> BLACK
6	26059	2		BOCCOLA FISS.SELLA & LAT.03/->	COLLAR, SEAT/SIDE PANEL 03/->
7	49484	2		VITE TCEI 6X20	BOLT TCEI 6X20
8	67269	1	BLU	PARAFANGO ANT JUN'13 SMX BNC	MADGUARD, FRONT SMX-J WHITE
8	67289	1	BIANCO	PARAFANGO ANT JUN'13 SMX BLU TMSenza fori	MADGUARD, FRONT SMX-J BLU
8	67358	1		PARAFANGO ANT JUN'13 SMX NERO	
9	26132	4		BOCCOLA PARAF. ANT. M12	BUSH, FRONT MUDGUARD M.12->
10	67301	1	BLU	PORTANUMERO ANT 85J 13/-> BLU CON PASSACAVO	FRONT PLATE MX 85J 13-> BLU
10	67317	1	BIANCO	PORTANUMERO ANT 85J 13/-> BNC CON PASSACAVO	FRONT NUMBER PLATE 85J WHITE
10	67329	1		PORTANUMERO ANT 85J 13/-> NERO CON PASSACAVO	FRONT NUMBER PLATE MX JUNIOR MY13-> BLACK
11	49356	4		VITE TE F/R 6X20 Ch.8	BOLT 6X20 T.8
12	49117	4		RONDELLA 18X6.5X2 X RADIAT.08	WASHER 18X6.5X2 RADIATOR 08
13	67309	1		SELLA JUNIOR BLU MY13	SEAT JUNIOR BLU M.13
14	67314	1		COPERTINA SELLA JUNIOR BLU M13	SEAT, COVER JUNIOR BLU M.13
15	67309.00	1		SPUGNA SELLA JUNIOR 13->	FOAM, SEAT JUNIOR M.13->
16	73047	2		PIASTRINO AL ATT.SELLA POSTER.	PLATE AI REAR SEAT HOLDER
17	49435	4		VITE TE 5X12	SCREW TE 5X12
18	49571	5		VITE TBCE 6x 7 PROT. FORCELLA	BOLT TBCE 6x7

FILTRO ARIA
AIR FILTER

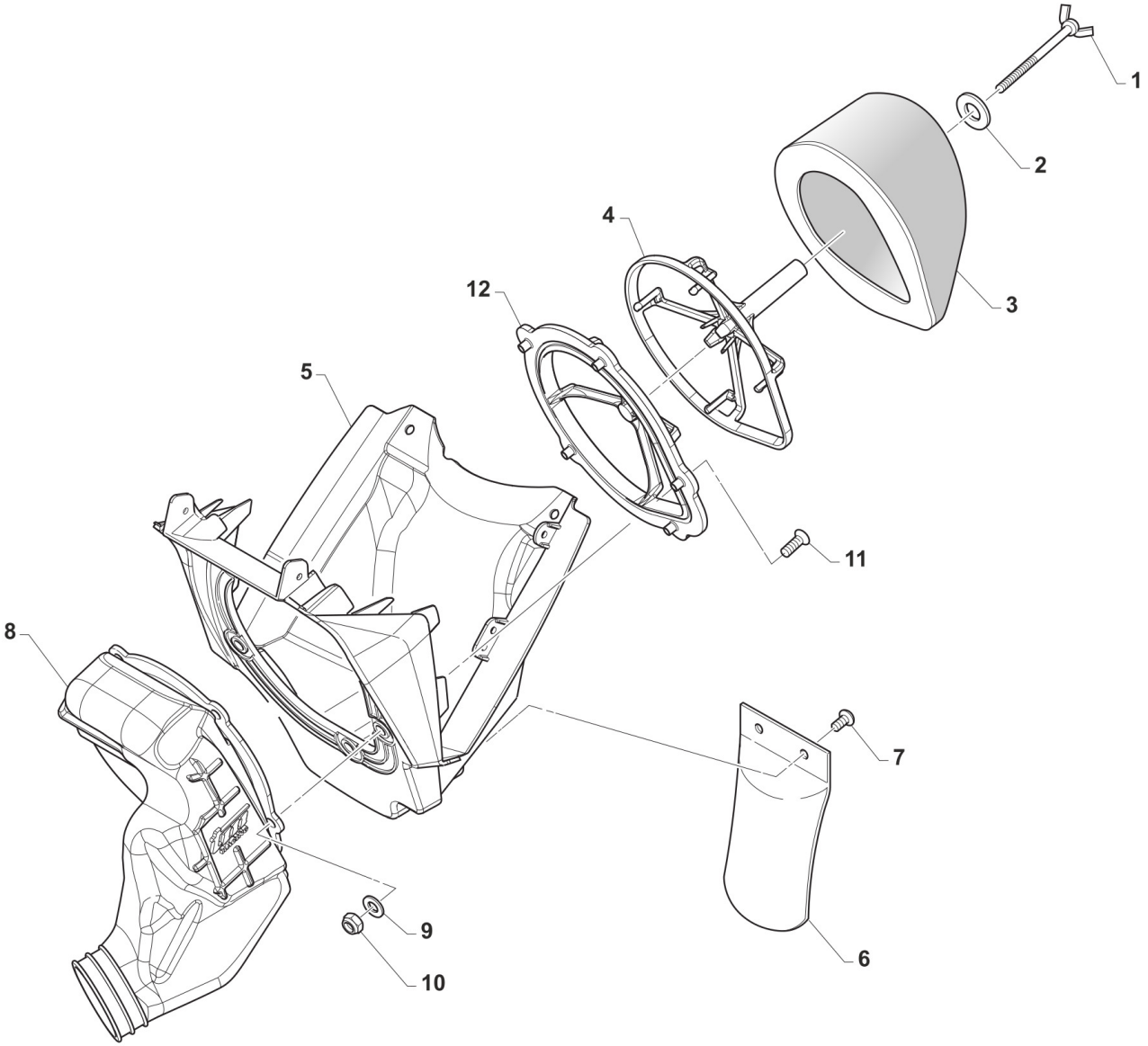

TM0115

1	49324	1		GALLETTO C/PERNO FILTRO 6x70	SCREW WITH PIN AIR FILTER 6X70
2	26084	1		RONDELLA PARAF ANT. 24x2 M.08	WASHER, FRONT FENDER 24 X 2
3	66060	1		FILTRO ARIA 2T/4T/85 M.13/14ES	AIR FILTER M. 2013 ES
4	66062	1		GABBIA FILTRO M.2013 ES/J'13	CAGE, AIR FILTER 66060 ES/J'13
5	67305	1		CASSA FILTRO JUNIOR 2013 CPL	AIR BOX 85 JUNIOR M.13-> ASSY
6	67104	1		PROTEZIONE MONO MOD. 92/->	GUARD, SHOCK ABSOVER M. 92/->
7	49320	2		VITE TB LARGA 6X15(16)LATERALI	BOLT TB LARGE 6X15(16)
8	67312	1		CUFFIA CASSA FILTRO JUN.2013	AIR BOOT JUNIOR MY13
9	49602	5		RONDELLA 5 x 15 x 1,2	WASHER 5x15
10	49629	5		DADO M 5 ALTO AUTOBLOCCANTE	NUT 5mm, HIGHT SELF-LOCKING
11	49402	5		VITE TSEI 5X20	BOLT TSEI 5X20
12	66017	1		PIASTRA MANIC. C.FILTRO 2013	PLATE, AIR FILTER MANIFOLD 13

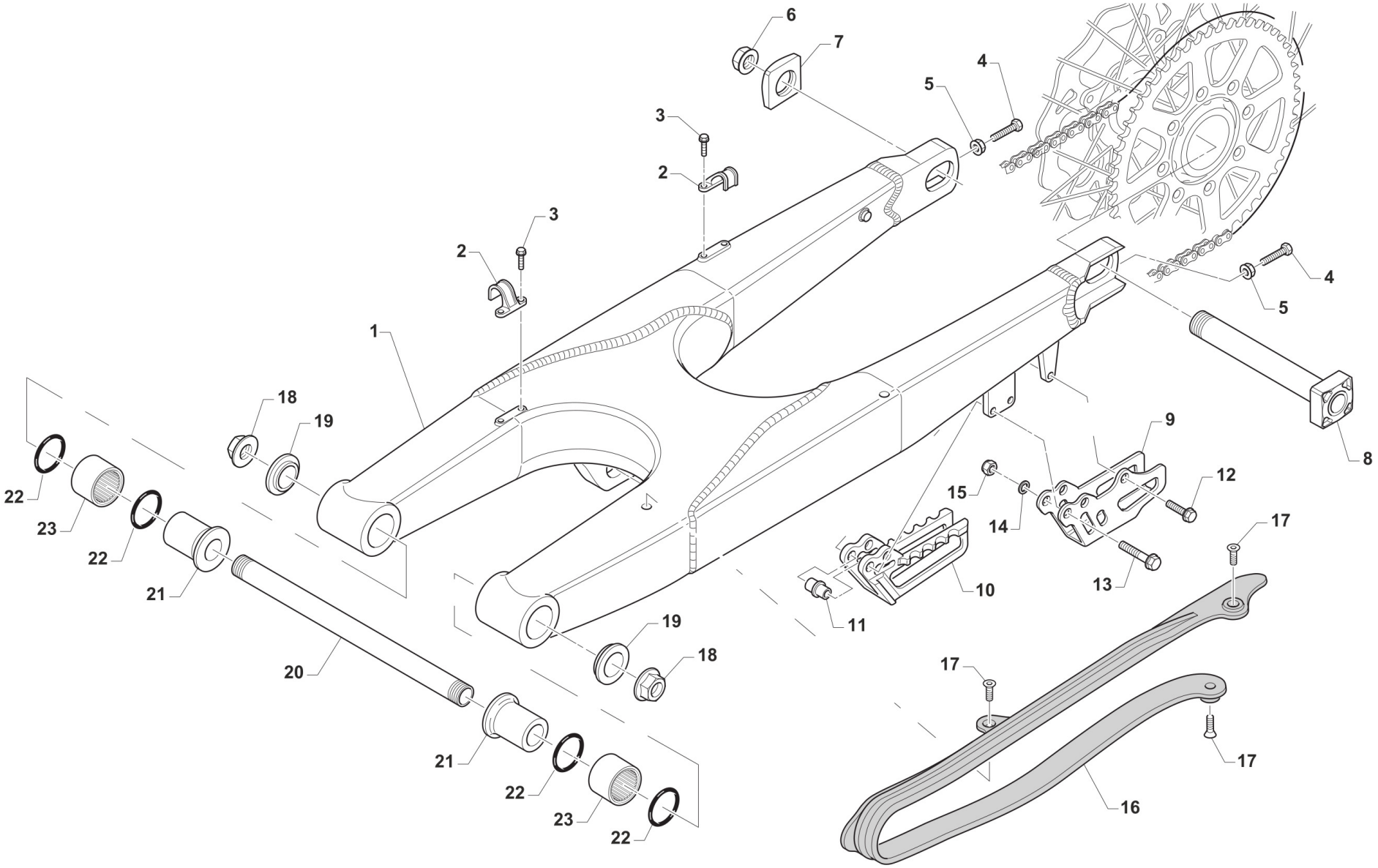
6
7
4
5
3
2
3
2
4
5
1
18
19
9
8
22
23
22
21
15
14
12
17
13
10
11
19
18
20
17
21
22
23
22
17
16
TM0116

1	73001.13	1		FORCELLONE 85 JUNIOR M. 13/->	SWINGARM JUNIOR MY13
2	67054	2		FERMA TUBO FRENO POST. M.97/->	RETAIN CLAMP BRAKE HOSE 97/->
3	49794	4		VITE AUTOFOR. 4.8X16 7504	BOLT, 4,8 X 16 7504
4	F49976	2		VITE TE 8X45 ES.10 FORCELLONE	SCREW TE 8X45 SWINGARM
5	49640	2		DADO M 8 FLANGIATO CHIAVE 12	NUT 8mm, FLANGE
6	49115	1		DADO PERNO R.PST J 06 CH20X1.5	NUT, RR WHEEL JUNIOR 20X1.5
7	70225	1		TENDICATENA JUNIOR'13 MOBILE	ADJ BLOCK, CHAIN JUNIOR 2013
8	74045.13	1		PERNO RUOTA POST. JUNIOR 2013	AXLE, RR WHEEL JUNIOR 2013
9	73130	1		PASSACATENA ALLUM. MOD. 11/->	PLATE, CHAIN GUIDE M. 11/->
10	67102.10	1		PASSACATENA NYLON MOD.2011	GUIDE, CHAIN M. 11/->
11	26092	1		BOCCOLA PASSACATENA M.11->	BUSH, CHAINGUIDE M11->
12	49370	1		VITE TE F/R 6X12	BOLT 6X12
13	49362	2		VITE TE F/R 6X50 Ch.8	BOLT 6X50 T.8
14	49603	2		RONDELLA M 6,4 X 12 X 1,6	WASHER 6x12
15	49638	2		DADO M 6 ALTO AUTOBLOCCANTE	NUT 6mm, HIGHT SELF-LOCKING
16	67099.15	1		PROTEZIONE FORCELLONE M.2015	SWINGHARM PROTECTION M.2015
17	49396	3		VITE TSEI 5X10	BOLT TSEI 5X10
18	49095	2		DADO 16 FORCELLONE MOTO 95/10	NUT, SWINGARM AXLE M. 95/05
19	73115	2		COPERCHIO BOCCOLA FORC. M08->	COLLAR, SWINGARM M.08
20	74013	1		PERNO FORCELLONE M.95/07 85J13	AXLE, SWINGARM 16 M. 95/06
21	73138	2		BOCCOLA FORC.J'13 F16 30X44.5	BUSH JUNIOR FORK H.16 30X44,5
22	12102	4		O RING LEVERAGGIO & FORCELLONE	O-RING, LINKAGE & SWINGARM
23	19043	2		ASTUCCIO A RULLI HK 20/30	NEEDLE CAGE HK 20/30

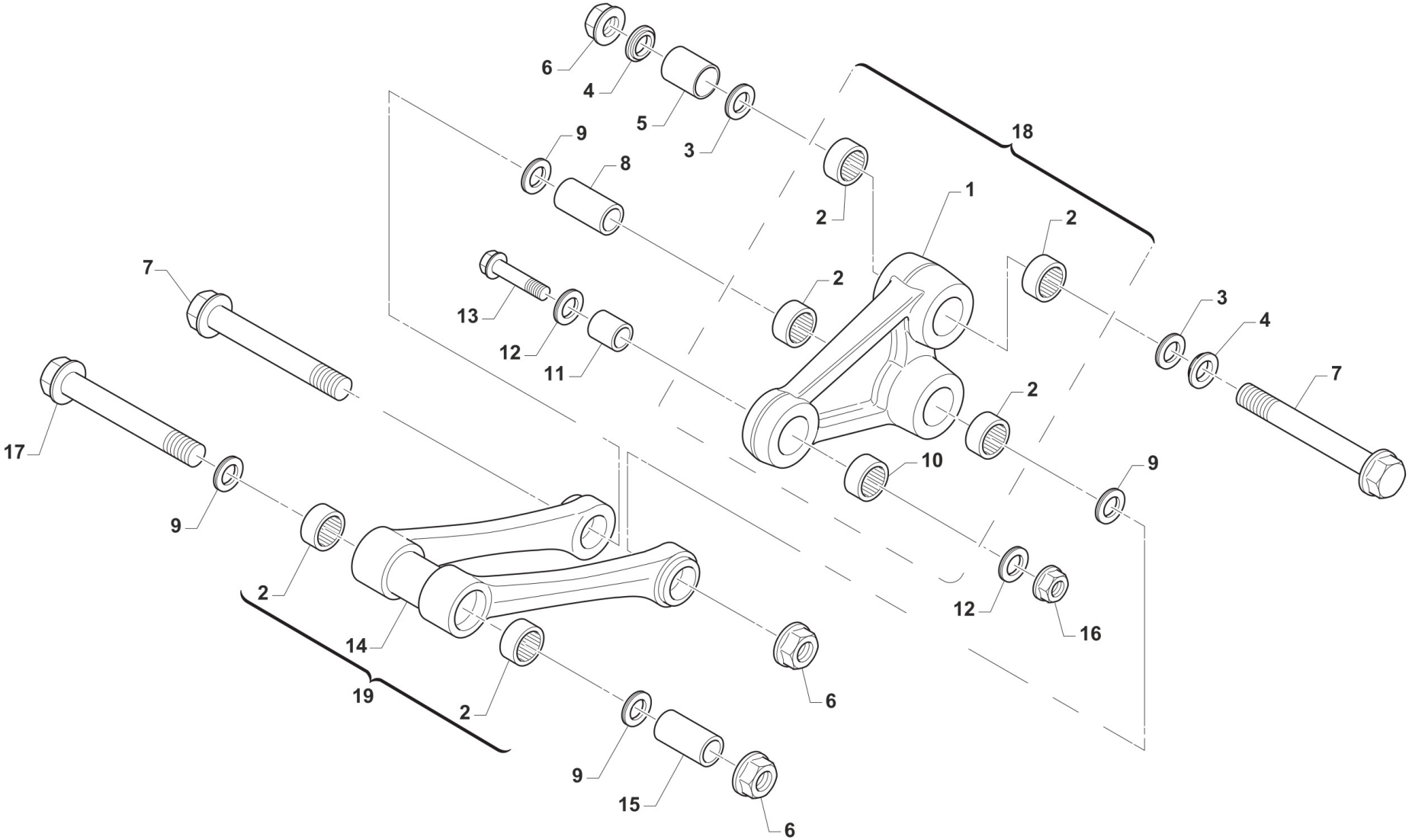

TM0117

1	73134	1		TRIANGOLO SOSP. 85J 13/-> NUDO	ARM, LINKAGE
2	19106	6		GABBIA A RULLI 26X20H16 TR.FO.	BUSH NEEDLE CAGE 26 X 20 H16
3	12010	2		O RING ORM 0240-30 TRIANG.05/6	O-RING, LINKAGE 05/6 ORM 0240-30
4	73075	2		COPERCHIO BOCCOLA TRIANG '05	COVER, BUSH
5	73211	1		BOCCOLA TRIANGOLO LEVER.05/->	BUSH, ARM RELAY 12X20X38
6	49682	3		DADO M12X1,25 FLANG.AUTOBL.AC	NUT, M 12 x 1,25 FLANGE SL
7	49345	1		VITE TE F/R 12X90 1.25 Ch13	BOLT TE F/R 12X90 1.25 T.13
8	F73416	1		BOCCOLA TRIANG. 20x48F12 05/->	COLLAR, ROD M.04 12x20x48
9	12102	4		O RING LEVERAGGIO & FORCELLONE	O-RING, LINKAGE & SWINGARM
10	19101	1		GABBIA RULLI DL 18/12 TRIANG.	BUSH NEEDLE CAGE DL 18/12
11	73214	1		BOCCOLA 18 X 20 F.10 TRIANGOLO 07/->	COLLAR, ARM ASSY 10 18X20 M.07
12	F12312	2		O RING FILTRO OLIO P.ASPIRAZ.+LEV.	O-RING, OIL FILTER
13	49791	1		VITE TE F/R 10X39 1.25 T.AL08	BOLT, M10X1.25X39 ALU.FRAME08
14	73135	1		TRAPEZIO SOSP. 85J 13/-> NUDO	ROD, LINKAGE
15	73204	1		BOCCOLA TRAPEZIO 20 x 74 F.12	BUSHING 20x74x12, ROD SUSP. 05
16	F49962	1		DADO M 10 X 1,25 CH 14 FLANGIATO	NUT, M10 X 1,25 KEY 14
17	49884	1		VITE TE F/R 12X110 LEV.85J13->	BOLT TE F/R 12X110 LINKAGE 85J
18	73142	1		TRIANGOLO SOSP. 85J 13/-> CPL	ARM ASSY JUNIOR
19	73143	1		TRAPEZIO SOSP. 85J 13/-> CPL	ROD ASSY JUNIOR

RUOTA POSTERIORE SMX
REAR WHEEL SMX

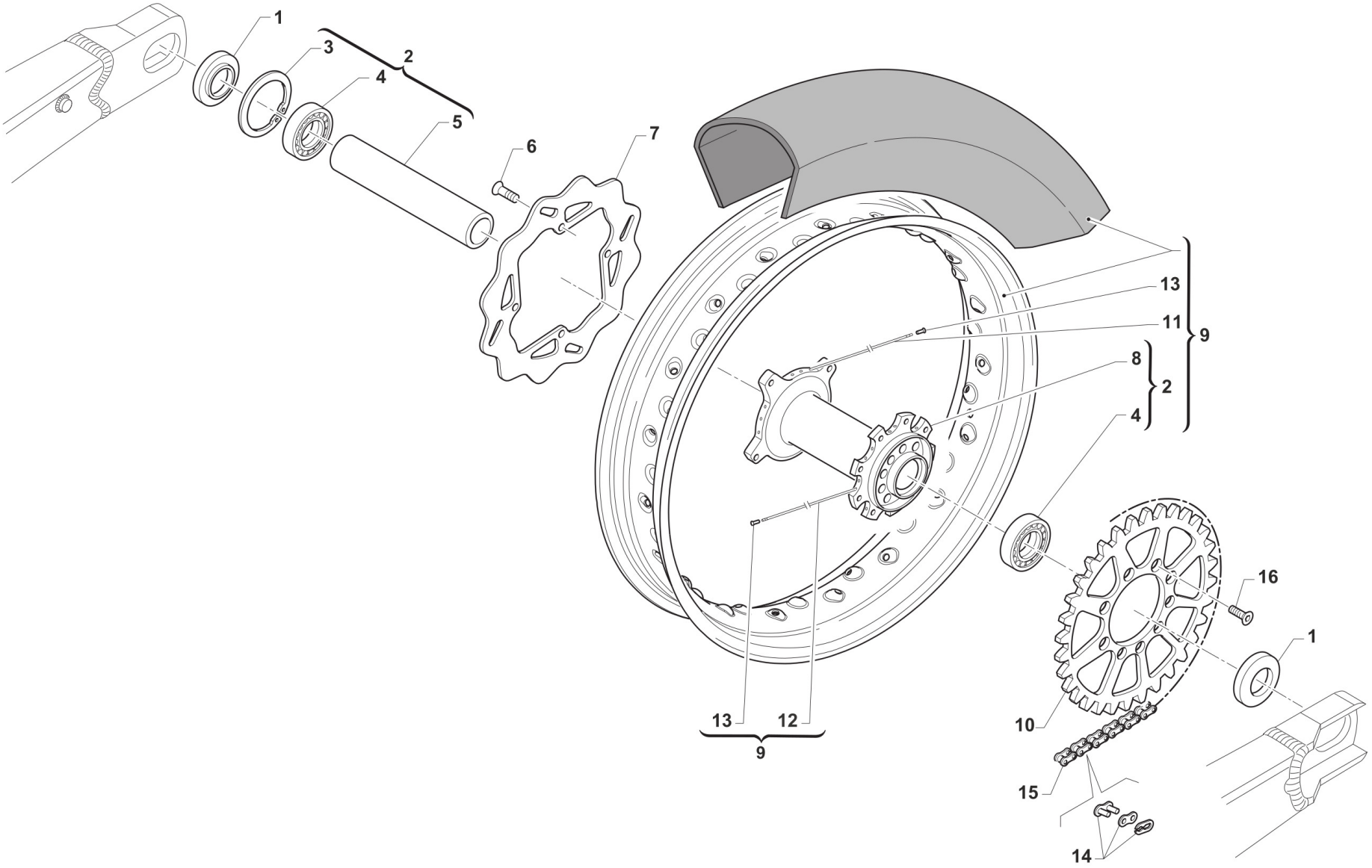

TM0119

1	26104	2		BOCCOLA CUSC.POS.80J 35X17 D/S	BUSH, RR WHEEL BEAR. 85J 35X17
2	70228	1		MOZZO POST 80/85J 13/-> CPL	HUB REAR WHEEL 85J 13-> ASSY
3	49249	1		SEEGER I 40 RUOTA POST.JUNIOR	SEEGER I 40
4	03067	2		CUSCINETTO RUOTA POST. 80/85 Jun.	BUSH, REAR WHEEL 80/85cc Jun.
5	70232	1		DIST.INT.R.POST. JUN'2013	INNER SPACER REAR WHEEL J.13->
6	49440	4		VITE TE 6X14	BOLT TE 6X14
7	69308	1		DISCO FRENO 190X3.5 PST 85J 18MM	BRAKE DISK, JUNIOR, MUPO FORK
8	70228.1	1		MOZZO POST 80/85J 13/-> NUDO	HUB, REAR WHEEL JUNIOR
9	70238.1	1		RUOTA PST.CPL.JUNIOR 1213 C/G SMX, COMPLETA DI GOMMA MONTATA	WHEEL, REAR, SMX-J ASSY WITH TYRE 12
10	70104.42	1		CORONA CAT. 85 JUNIOR - Z 42	SPROCKET 42T, REAR, JUNIOR
10	70104.43	1		CORONA CAT. 85 JUNIOR - Z 43	SPROCKET 43T, REAR, JUNIOR
10	70104.44	1		CORONA CAT. 85 JUNIOR - Z 44	SPROCKET 44T REAR JUNIOR
10	70104.45	1		CORONA CAT. 85 JUNIOR - Z 45	SPROCKET 45T REAR JUNIOR
10	70104.46	1		CORONA CAT. 85 JUNIOR - Z 46	SPROCKET 46T, REAR, JUNIOR
10	70104.47	1		CORONA CAT. 85 JUNIOR - Z 47	SPROCKET 47T, REAR, JUNIOR
11	70311	14		RAGGIO R.POST L.FRENO 85 SMX 137 X 3.0	SPOKE, REAR SMX-J, BRAKE SIDE
12	70312	14		RAGGIO R.POST L.CORONA 85 SMX 142 X 3.0	SPOKE, REAR SMX-J, SPROCKET SIDE
13	70313	28		NIPPLO ACCIAIO 3 (85 SMX)	NIPPLE 3MM
14	70097	1		GIUNTO CATENA 126 HK KART	CHAIN, JOINT 126 RH
15	70092.1	1		CATENA REGINA 126 MG 85J	CHAIN 126 RX3 X 126 85J
16	49421	7		VITE TSEI 8X25	BOLT TSEI 8X25

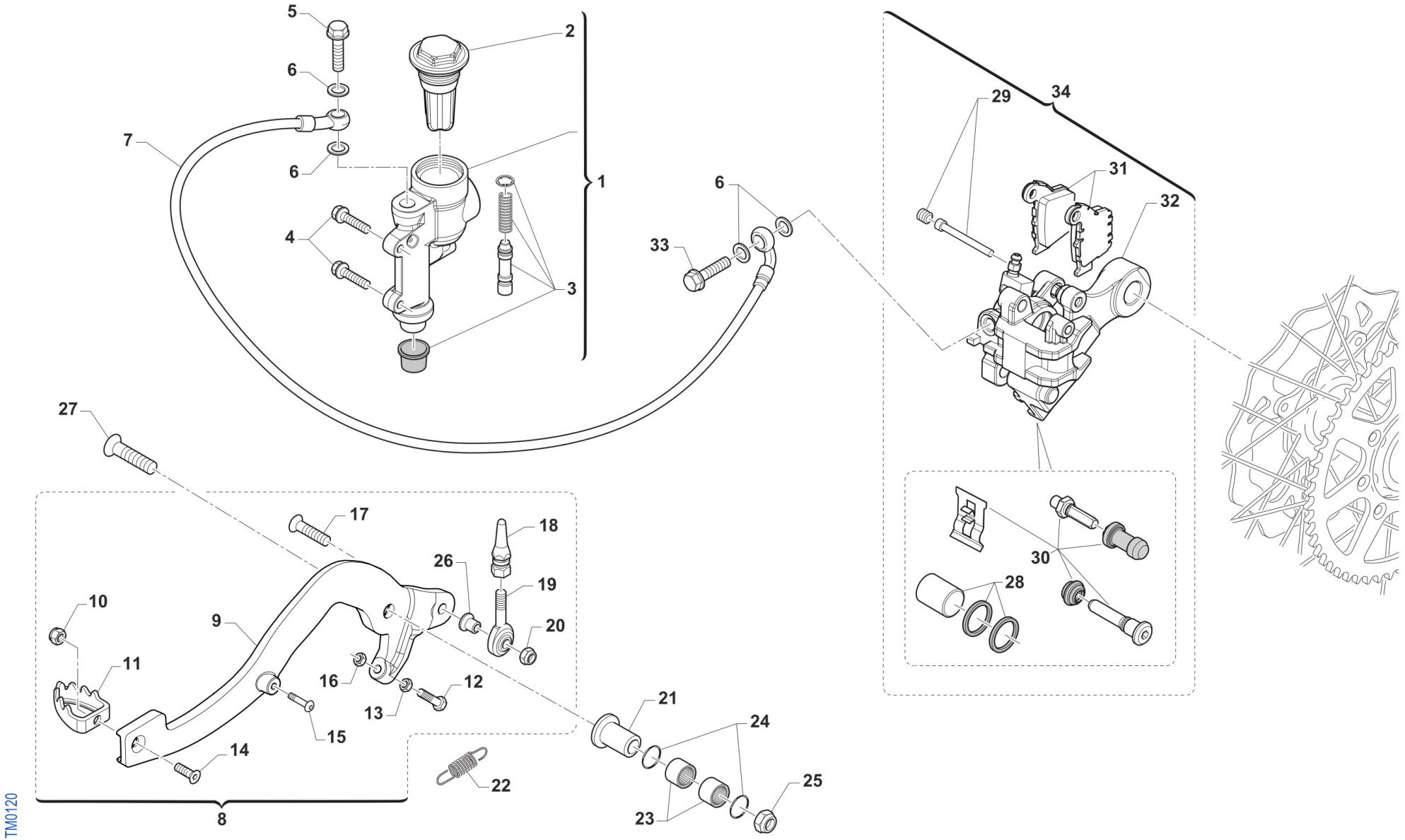
5
2
6
7
6
1
4
3
6
33
34
29
31
32
27
17
18
26
19
10
9
20
11
16
12
13
21
24
15
14
22
25
23
8
TM0120

1	69243	1		POMPA FRENO POST 85J 13/-> BRE	MASTER CYLINDER, REAR 85J 13->
2	69264	1		TAPPO POMPA FRE.POST.JUNIOR	CAP + RUBBER, REAR BRAKE PUMP JUNIOR
3	69263	1		FLOTTANTE POMPA FRENO POST.JUNIOR	REPAIRASSY, RR BRAKE PUMP JUNIOR MY13->
4	49355	2		VITE TE F/R 6X16 Ch.8	BOLT 6X16 T.8
5	69093	1		BULLONE 10X1 TUBO FRENO BREMBO 03	HOLLOW SCREW M10X1 BREMBO BR.
6	69034	4		RONDELLA X BULLONE FREN B22001	WASHER B22001, BRAKE HOSE
7	69068.13	1		TUBO FRENO POST. JUNIOR M13-> BRAK	HOSE, REAR BRAKE 85J M.13->
8	69235	1		PEDALE FRENO POST.JUN'13 CPL	BRAKE PEDAL, REAR JUN.13->ASSY
9	69235.1	1		PEDALE FRENO POST.JUN'12 NUDO	BRAKE PEDAL RR JUNIOR M.12->
10	49633	1		DADO M 5 BASSO AUTOBLOCCANTE	NUT 5mm, LOW SELF-LOCKING
11	69002.99	1		PARTE ANT.PED.FRENO POST.99/->	PIT, RR BRAKE PEDAL 99/->
12	49444	1		VITE TE 6X25	BOLT TE 6 X 25
13	49635	1		DADO M 6 BASSO 5589	NUT M 6
14	49400	1		VITE TSEI 5X14	BOLT TSEI 5x14
15	49557	1		VITE TBCE 4X16	BOLT TBCE 4x16
16	49367	2		VITE TE F/R 8X45 Ch.10	BOLT 8X45 T.10mm
17	49414	1		VITE TSPEI 6X30 NORMALE UNI 5933	BOLT TSEI 6X30
18	69244	1		PERNO UNIBALL PEDALE FR.JUN'13	PIN UNIBALL BRAKE PEDAL JUN.13
19	69133	1		SNODO SFERICO PED.FRENO 85JM13	JOINT BRAKE PEDAL 85cc M13->
20	49367	1		VITE TE F/R 8X45 Ch.10	BOLT 8X45 T.10mm
21	69205	1		BOCCOLA FRENO POST T.AL 08/->	BUSH, REAR BRAKE 08/->
22	F16434	1		MOLLA PEDALE FRENO M.08 T.AL.	SPRING, RR BRAKE PEDAL 08/->
23	19044	2		GABBIA A RULLI FRENO POST.	NEEDLE BUSH REAR BRAKE PEDAL
24	12051	2		O RING FRENO POST. PEDALE	O-RING REAR BRAKE PEDAL BUSH
25	49680	1		DADO M 8 X 1,25 CH 12 FLANG. AUTOBLOCK	NUT, M 8X1,25 FLANG. SB
26	69245	1		DIST. UNIBALL PEDALE FR.JUN'13	SPACER, UNIBALL
27	49427	1		VITE TSEI 8X55	BOLT TSEI 8X55
28	69253	1		KIT PISTONE+ OR PINZA FRENO POST d.25 BRAKING JUNIOR	PISTON+O-RING REAR CALIPER BRAKING JUNIOR

29	69280	1		PERNO + GRANO PAST. ANT/POST BRAKING JUNIOR	PIN+GRUB ANT/POST BRAKING JUNIOR
30	69254	1		KIT VITI + CUFFIE + LAMIERINO PINZA ANT/POST BRAKING JUNIOR	BOLT+RETAINER BRAKE PAD ANT/POST JUNIOR
31	69247	1		PASTIGLIE ANT. / POST. JUNIOR M.13->	PAD KIT, F.&R. CALIPER J 13
32	69241	1		SUPPORTO PINZA PST.BRAKING J13	HOLDER, REAR BRAKE CALIPER J13
33	69094	1		BULLONE 10X1.25 T.FRENO NISSIN 03	BOLT,10X1,25 BRAKE HOSE NISSIN
34	69242	1		PINZA FRENO POST. JUNIOR M.13->	REAR BRAKE CALIPER D.25mm

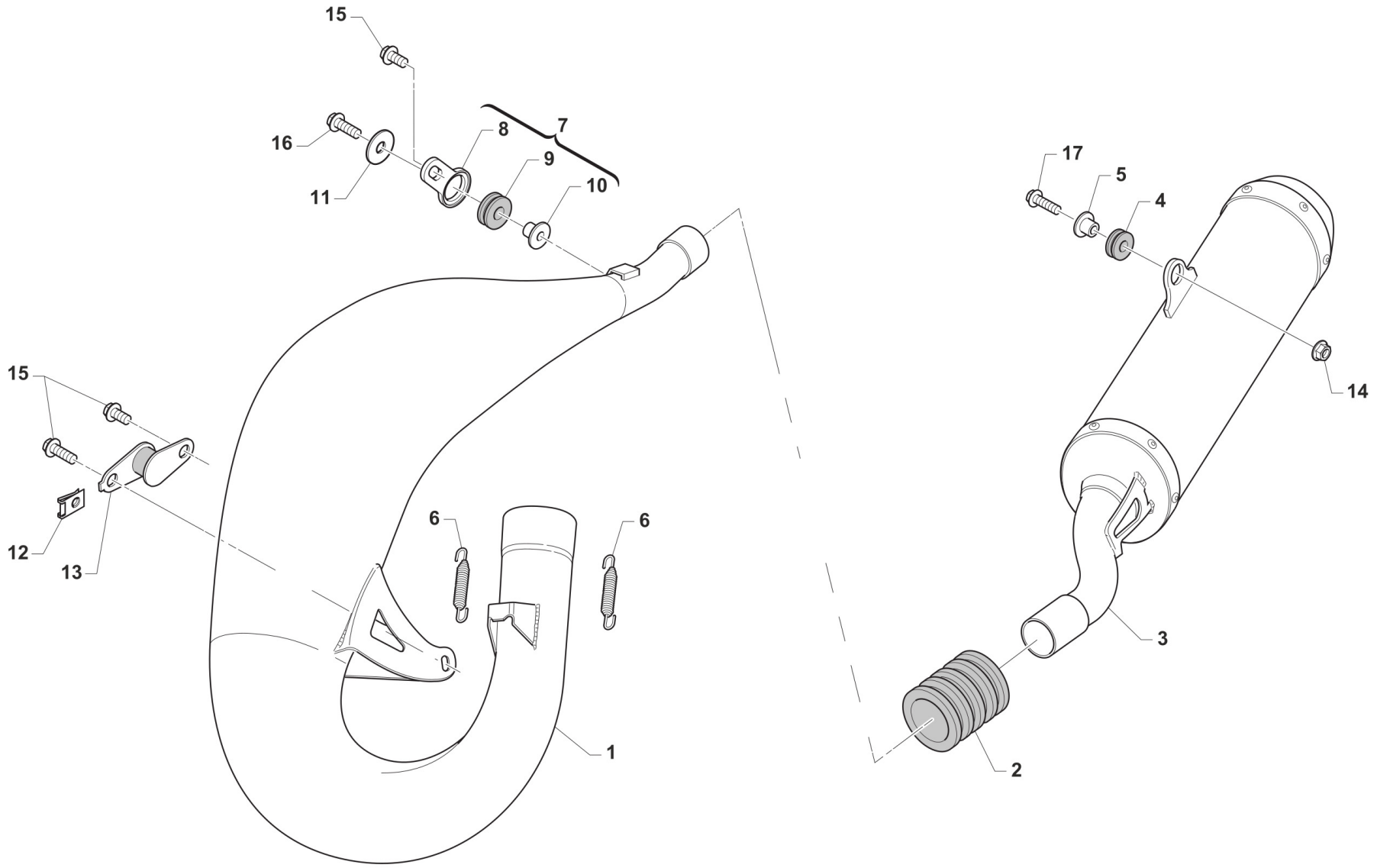

TM0121

1	27184	1		MARMITTA 85 JUNIOR MY 2019 SCALVINI	EXHAUST, SCALVINI JUNIOR MY19
2	21019	1		MANICOTTO SILENZIATORE SILICONE 97 ->	RUBBER, SILENCER/PIPE 97/->
2	21078	1		MANICOTTO MARMIT/SILENZ. SILICONE 85cc BLU	
3	27160	1		SILENZIATORE 85 JUNIOR M14 SC	SILENCER 85cc JUNIOR 14-> SCAL
4	21008	1		GOMMINO ANTIVIBR.RAD.K.SILENZ.	RUBBER, GROMMET RADIATOR/SILEN
5	26117	1		BOCCOLA SILENZIATORE 09->	BUSH, SILENCER M.09->11
6	16051	2		MOLLA TR.SCARICO BIC. KF3/85j	SPRING, EXHAUST KF3/85j
7	21094	1		SILENT BLOCK 05 PIAST+GOMM+BOC	SILENT BLOCK 05 ASSY PL+RU+BU
8	21093	1		PIASTRINO SILENT BLOCK 05 NUDO	PLATE, SILENT BLOCK 05
9	21102	1		GOMMINO ANTIV.RADIAT.SILENZ. MY 94->	RUBBER, GROMMET RADIATOR and SILENC.
10	26074	1		BOCCOLINA X SILENT-BLOCK 21094	BUSH FOR SILENT-BLOCK COD21094
11	26084	1		RONDELLA PARAF ANT. 24x2 M.08	WASHER, FRONT FENDER 24 X 2
12	49803	1		PRESTOLA SILENT BLOCK MARMITTA	RANGE CHANGE METAL NUT M6
13	21111	1		SILENT BLOCK MARMITTA M.94->	SILENT BLOCK EXHAUST PI.M.94->
14	49676	1		DADO M 6X1 FLANG. AUTOBL.ACC.	NUT, FLANGED M6 X 1 S.B.
15	49355	3		VITE TE F/R 6X16 Ch.8	BOLT 6X16 T.8
16	49356	1		VITE TE F/R 6X20 Ch.8	BOLT 6X20 T.8
17	49359	1		VITE TE F/R 6X35 Ch.8	BOLT 6X35 T.8

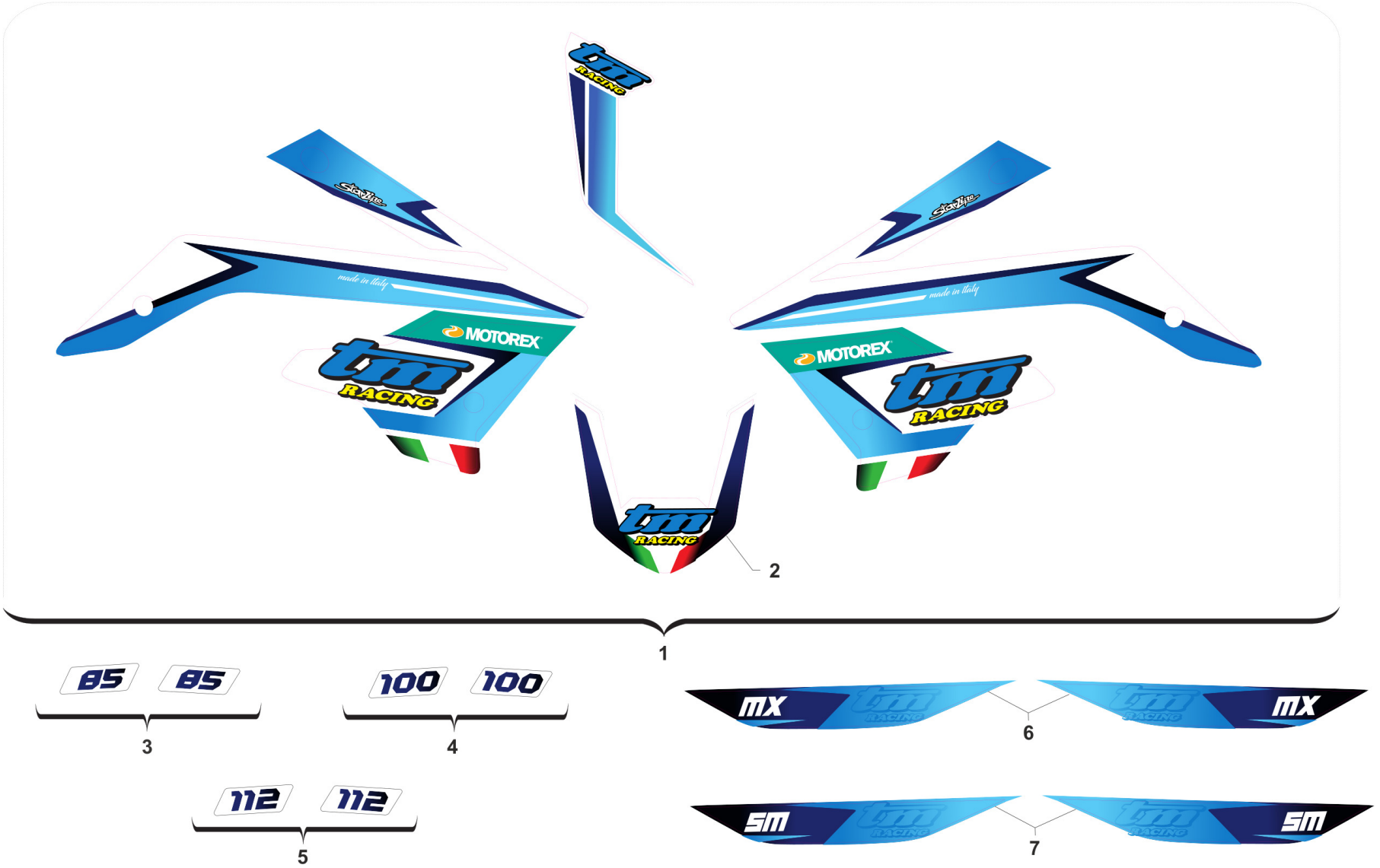
made in Italy
MOTOREX
RACING
2
1
85
85
3
100
100
4
112
112
5
MX
6
SM
7

K423-2T-J

1	94088.23	1		KIT ADESIVI JUNIOR M.2023 S/P.POST	
2	94020.23	1		ADESIVO PARAF. ANT JUNIOR MY 2023	
3	94199.85	1		KIT AD. M.23 CIL 85 JUNIOR	
4	94199.100	1		KIT AD. M.23 CIL 100 JUNIOR	
5	94199.112	1		KIT AD. M.23 CIL 112 JUNIOR	
6	94253.23	1		KIT AD. M.23 LAT.P.NUM MX 85 JUNIOR	
7	94254.23	1		KIT AD. M.23 LAT.P.NUM SM 85 JUNIOR	

2T85SMXJ23-T -

TELAIO - FRAME

00692	2T85MXJ19-T-07	19	2
03062	2T85SMXJ22-T-04	7	2
03067	2T85SMXJ19-T-12	4	2
03072	2T85MXJ22-T-03	18	2
	2T85MXJ22-T-03.1	18	2
12010	2T85MXJ19-T-11	3	2
12051	2T85MXJ19-T-13	24	2
12062	2T85SMXJ22-T-04	9	1
12102	2T85MXJ19-T-10	22	4
	2T85MXJ19-T-11	9	4
16022	2T85MXJ19-T-07	23	2
16051	2T85MXJ19-T-14	6	2
19043	2T85MXJ19-T-10	23	2
19044	2T85MXJ19-T-13	23	2
19101	2T85MXJ19-T-11	10	1
19106	2T85MXJ19-T-11	2	6
21008	2T85MXJ19-T-14	4	1
21019	2T85MXJ19-T-14	2	1
21020	2T85MXJ19-T-05	13	1
21033	2T85MXJ22-T-03	22	1
	2T85MXJ22-T-03.1	22	1
21071	2T85MXJ19-T-05	15	1
21078	2T85MXJ19-T-14	2	1
21093	2T85MXJ19-T-14	8	1
21094	2T85MXJ19-T-14	7	1
21102	2T85MXJ19-T-05	5	4
	2T85MXJ19-T-14	9	1
21111	2T85MXJ19-T-14	13	1

21122.19	2T85MXJ19-T-05	17	1
23016	2T85MXJ19-T-05	1	1
23017	2T85MXJ19-T-05	2	1
23062	2T85MXJ19-T-05	7	1
23067	2T85MXJ19-T-05	6	1
23068	2T85MXJ19-T-05	8	1
26059	2T85SMXJ22-T-08	6	2
26064	2T85MXJ19-T-05	4	4
26074	2T85MXJ19-T-14	10	1
26082	2T85MXJ19-T-06	9	1
26083	2T85MXJ19-T-06	5	1
26084	2T85MXJ19-T-09	2	1
	2T85MXJ19-T-14	11	1
26092	2T85MXJ19-T-10	11	1
26104	2T85SMXJ19-T-12	1	2
26117	2T85MXJ19-T-14	5	1
26132	2T85SMXJ22-T-08	9	4
26141	2T85MXJ19-T-07	26	1
26144	2T85SMXJ22-T-04	3	1
26228	2T85MXJ19-T-07	12	1
26229	2T85MXJ19-T-07	13	1
27160	2T85MXJ19-T-14	3	1
27184	2T85MXJ19-T-14	1	1
35270.13	2T85MXJ19-T-01	2	1
49084	2T85SMXJ22-T-04	5	1
49095	2T85MXJ19-T-10	18	2
49115	2T85MXJ19-T-10	6	1
49117	2T85SMXJ22-T-08	12	4

49249	2T85SMXJ19-T-12	3	1
49261	2T85SMXJ22-T-04	11	1
49320	2T85MXJ19-T-09	7	2
49324	2T85MXJ19-T-09	1	1
49345	2T85MXJ19-T-11	7	1
49353	2T85MXJ19-T-07	10	1
49354	2T85MXJ19-T-07	11	1
49355	2T85MXJ19-T-13	4	2
	2T85MXJ19-T-14	15	3
49356	2T85MXJ19-T-14	16	1
	2T85SMXJ22-T-08	4	2
	2T85SMXJ22-T-08	11	4
49359	2T85MXJ19-T-14	17	1
49362	2T85MXJ19-T-10	13	2
49364	2T85MXJ19-T-07	25	2
49366	2T85MXJ19-T-07	7	2
49367	2T85MXJ19-T-13	16	2
	2T85MXJ19-T-13	20	1
49370	2T85MXJ19-T-10	12	1
	2T85SMXJ22-T-04	4	7
49382	2T85MXJ19-T-07	20	2
49383	2T85MXJ19-T-07	22	2
49396	2T85MXJ19-T-10	17	3
49400	2T85MXJ19-T-13	14	1
49402	2T85MXJ19-T-09	11	5
49404	2T85MXJ19-T-06	6	1
49414	2T85MXJ19-T-13	17	1
49421	2T85SMXJ19-T-12	16	7

2T85SMXJ23-T -
TELAIO - FRAME

49427	2T85MXJ19-T-13	27	1
49435	2T85MXJ19-T-06	4	2
	2T85SMXJ22-T-08	17	4
49440	2T85SMXJ19-T-12	6	4
49444	2T85MXJ19-T-13	12	1
49445	2T85MXJ19-T-07	16	2
49474	2T85MXJ22-T-03	33	2
	2T85MXJ22-T-03.1	33	2
49484	2T85MXJ19-T-05	3	4
	2T85SMXJ22-T-08	7	2
49501	2T85MXJ19-T-02	18	2
	2T85MXJ22-T-03	32	2
	2T85MXJ22-T-03.1	32	2
49502	2T85MXJ22-T-03	25	8
	2T85MXJ22-T-03.1	25	8
49557	2T85MXJ19-T-13	15	1
49571	2T85MXJ22-T-03	2	4
	2T85MXJ22-T-03.1	2	4
	2T85SMXJ22-T-08	18	5
49574	2T85MXJ19-T-06	10	2
	2T85SMXJ22-T-08	2	7
49602	2T85MXJ19-T-09	9	5
49603	2T85MXJ19-T-10	14	2
49611	2T85MXJ19-T-07	14	2
49612	2T85MXJ19-T-07	17	2
49629	2T85MXJ19-T-09	10	5
49633	2T85MXJ19-T-13	10	1
49635	2T85MXJ19-T-13	13	1

49638	2T85MXJ19-T-10	15	2
49640	2T85MXJ19-T-10	5	2
49676	2T85MXJ19-T-14	14	1
49680	2T85MXJ19-T-07	6	3
	2T85MXJ19-T-07	15	2
	2T85MXJ19-T-13	25	1
49681	2T85MXJ19-T-07	4	1
49682	2T85MXJ19-T-11	6	3
49724	2T85MXJ19-T-07	5	2
49758	2T85MXJ22-T-03	28	2
	2T85MXJ22-T-03.1	28	2
49791	2T85MXJ19-T-11	13	1
49792	2T85MXJ19-T-07	2	1
49794	2T85MXJ19-T-10	3	4
49803	2T85MXJ19-T-14	12	1
49884	2T85MXJ19-T-11	17	1
51014	2T85MXJ19-T-05	10	2
51036	2T85MXJ19-T-05	9	4
51062	2T85MXJ19-T-05	14	5
64010	2T85MXJ19-T-01	5	1
64017	2T85MXJ19-T-01	1	1
64040	2T85MXJ19-T-01	3	1
64078.1	2T85MXJ19-T-01	6	1
64086	2T85MXJ19-T-01	4	1
64238	2T85MXJ19-T-01	14	1
64240	2T85MXJ19-T-01	8	1
64241	2T85MXJ19-T-01	13	1
64243	2T85MXJ19-T-01	11	1

64245	2T85MXJ19-T-01	12	1
64247	2T85MXJ19-T-01	9	1
64249	2T85MXJ19-T-01	10	1
65005	2T85MXJ19-T-06	3	1
65009	2T85MXJ19-T-06	7	1
66017	2T85MXJ19-T-09	12	1
66060	2T85MXJ19-T-09	3	1
66062	2T85MXJ19-T-09	4	1
67036	2T85MXJ19-T-05	11	1
67054	2T85MXJ19-T-10	2	2
67088	2T85MXJ19-T-07	8	1
67088.08	2T85MXJ19-T-07	27	1
67099.15	2T85MXJ19-T-10	16	1
67102.10	2T85MXJ19-T-10	10	1
67104	2T85MXJ19-T-09	6	1
67170	2T85MXJ19-T-05	12	1
67269	2T85SMXJ22-T-08	8	1
67289	2T85SMXJ22-T-08	8	1
67301	2T85SMXJ22-T-08	10	1
67302	2T85MXJ22-T-03	1	1
	2T85MXJ22-T-03.1	1	1
67305	2T85MXJ19-T-09	5	1
67308	2T85SMXJ22-T-08	5	1
67309	2T85SMXJ22-T-08	13	1
67309.00	2T85SMXJ22-T-08	15	1
67311	2T85MXJ19-T-06	2	1
67312	2T85MXJ19-T-09	8	1
67314	2T85SMXJ22-T-08	14	1

2T85SMXJ23-T -
TELAIO - FRAME

67315	2T85MXJ22-T-03	1	1
	2T85MXJ22-T-03	35	1
	2T85MXJ22-T-03.1	1	1
	2T85MXJ22-T-03.1	35	1
67317	2T85SMXJ22-T-08	10	1
67320	2T85MXJ19-T-06	1	1
67321	2T85SMXJ22-T-08	1	1
67322	2T85SMXJ22-T-08	3	1
67328	2T85SMXJ22-T-08	5	1
67329	2T85SMXJ22-T-08	10	1
67330	2T85MXJ22-T-03	34	1
	2T85MXJ22-T-03.1	34	1
67358	2T85SMXJ22-T-08	8	1
67375	2T85SMXJ22-T-08	1	1
67376	2T85SMXJ22-T-08	3	1
68068	2T85MXJ19-T-01	7	1
69002.99	2T85MXJ19-T-13	11	1
69034	2T85MXJ19-T-02	15	4
	2T85MXJ19-T-13	6	4
69068.13	2T85MXJ19-T-13	7	1
69093	2T85MXJ19-T-02	17	1
	2T85MXJ19-T-13	5	1
69094	2T85MXJ19-T-02	19	1
	2T85MXJ19-T-13	33	1
69133	2T85MXJ19-T-13	19	1
69205	2T85MXJ19-T-13	21	1
69235	2T85MXJ19-T-13	8	1
69235.1	2T85MXJ19-T-13	9	1

69236	2T85MXJ19-T-02	1	1
69241	2T85MXJ19-T-13	32	1
69242	2T85MXJ19-T-13	34	1
69243	2T85MXJ19-T-13	1	1
69244	2T85MXJ19-T-13	18	1
69245	2T85MXJ19-T-13	26	1
69246	2T85MXJ19-T-02	16	1
69247	2T85MXJ19-T-02	2	1
	2T85MXJ19-T-13	31	1
69248	2T85MXJ19-T-02	7	1
69253	2T85MXJ19-T-13	28	1
69254	2T85MXJ19-T-02	5	1
	2T85MXJ19-T-13	30	1
69263	2T85MXJ19-T-13	3	1
69264	2T85MXJ19-T-13	2	1
69280	2T85MXJ19-T-02	3	1
	2T85MXJ19-T-13	29	1
69306	2T85SMXJ22-T-04	16	1
69307	2T85SMXJ22-T-04	2	1
69308	2T85SMXJ19-T-12	7	1
69343	2T85MXJ19-T-02	6	1
69357	2T85MXJ19-T-02	9	1
69358	2T85MXJ19-T-02	10	1
69362	2T85MXJ19-T-02	13	1
69363	2T85MXJ19-T-02	8	1
69364	2T85MXJ19-T-02	11	1
69365	2T85MXJ19-T-02	14	1
69368	2T85MXJ19-T-02	12	1

70092.1	2T85SMXJ19-T-12	15	1
70097	2T85SMXJ19-T-12	14	1
70104.42	2T85SMXJ19-T-12	10	1
70104.43	2T85SMXJ19-T-12	10	1
70104.44	2T85SMXJ19-T-12	10	1
70104.45	2T85SMXJ19-T-12	10	1
70104.46	2T85SMXJ19-T-12	10	1
70104.47	2T85SMXJ19-T-12	10	1
70221	2T85SMXJ22-T-04	6	1
70221.1	2T85SMXJ22-T-04	8	1
70225	2T85MXJ19-T-10	7	1
70228	2T85SMXJ19-T-12	2	1
70228.1	2T85SMXJ19-T-12	8	1
70231	2T85SMXJ22-T-04	10	1
70232	2T85SMXJ19-T-12	5	1
70238.1	2T85SMXJ19-T-12	9	1
70239.1	2T85SMXJ22-T-04	14	1
70310	2T85SMXJ22-T-04	13	28
70311	2T85SMXJ19-T-12	11	14
70312	2T85SMXJ19-T-12	12	14
70313	2T85SMXJ19-T-12	13	28
	2T85SMXJ22-T-04	12	28
72002.01	2T85MXJ22-T-03	17	2
	2T85MXJ22-T-03.1	17	2
72036.11	2T85MXJ22-T-03	23	2
	2T85MXJ22-T-03.1	23	2
72097	2T85MXJ22-T-03	16	1
	2T85MXJ22-T-03.1	16	1

2T85SMXJ23-T -
TELAIO - FRAME

72098	2T85MXJ22-T-03	21	1
	2T85MXJ22-T-03.1	21	1
72099	2T85MXJ22-T-03	19	1
	2T85MXJ22-T-03.1	19	1
72118	2T85MXJ22-T-03	15	1
	2T85MXJ22-T-03.1	15	1
72119	2T85MXJ22-T-03	20	1
	2T85MXJ22-T-03.1	20	1
72124	2T85MXJ22-T-03	24	2
	2T85MXJ22-T-03.1	24	2
72131	2T85MXJ22-T-03	30	1
	2T85MXJ22-T-03.1	30	1
72132	2T85MXJ19-T-07	9	1
72137	2T85MXJ22-T-03	31	1
	2T85MXJ22-T-03.1	31	1
72140	2T85MXJ22-T-03.1	13	2
72150	2T85MXJ22-T-03.1	7	2
72151	2T85MXJ22-T-03.1	5	2
72152	2T85MXJ22-T-03.1	6	2
72153	2T85MXJ22-T-03.1	8	2
72154	2T85MXJ22-T-03.1	9	2
72155	2T85MXJ22-T-03.1	10	2
72156	2T85MXJ22-T-03.1	12	2
72157	2T85MXJ22-T-03.1	12	2
72158	2T85MXJ22-T-03.1	12	2
72161	2T85MXJ22-T-03.1	12	2
72163	2T85MXJ22-T-03	29	1
	2T85MXJ22-T-03.1	29	1

72166	2T85MXJ22-T-03.1	26	2
72197	2T85MXJ22-T-03.1	14	1
72198	2T85MXJ22-T-03.1	4	1
72255	2T85MXJ22-T-03.1	11	2
72256	2T85MXJ22-T-03.1	27	1
72257	2T85MXJ22-T-03.1	3	2
72260	2T85MXJ22-T-03	7	2
72261	2T85MXJ22-T-03	5	2
72262	2T85MXJ22-T-03	9	2
72263	2T85MXJ22-T-03	10	2
72264	2T85MXJ22-T-03	8	2
72265	2T85MXJ22-T-03	6	2
72266	2T85MXJ22-T-03	11	2
72267	2T85MXJ22-T-03	3	2
72268	2T85MXJ22-T-03	26	2
72284	2T85MXJ22-T-03	13	2
72285	2T85MXJ22-T-03	4	1
72286	2T85MXJ22-T-03	14	1
73000.13	2T85MXJ19-T-07	1	1
73001.13	2T85MXJ19-T-10	1	1
73002.12	2T85MXJ19-T-07	3	1
73036	2T85MXJ19-T-07	18	2
73047	2T85SMXJ22-T-08	16	2
73048.10	2T85MXJ19-T-07	24	1
73049.10	2T85MXJ19-T-07	24	1
73064	2T85MXJ19-T-07	21	2
73075	2T85MXJ19-T-11	4	2
73115	2T85MXJ19-T-10	19	2

73130	2T85MXJ19-T-10	9	1
73134	2T85MXJ19-T-11	1	1
73135	2T85MXJ19-T-11	14	1
73138	2T85MXJ19-T-10	21	2
73142	2T85MXJ19-T-11	18	1
73143	2T85MXJ19-T-11	19	1
73204	2T85MXJ19-T-11	15	1
73211	2T85MXJ19-T-11	5	1
73214	2T85MXJ19-T-11	11	1
74013	2T85MXJ19-T-10	20	1
74045.13	2T85MXJ19-T-10	8	1
74058	2T85SMXJ22-T-04	15	1
74060	2T85SMXJ22-T-04	1	2
94020.23	KA23-2T-J	2	1
94088.23	KA23-2T-J	1	1
94199.100	KA23-2T-J	4	1
94199.112	KA23-2T-J	5	1
94199.85	KA23-2T-J	3	1
94253.23	KA23-2T-J	6	1
94254.23	KA23-2T-J	7	1
F12312	2T85MXJ19-T-11	12	2
F16434	2T85MXJ19-T-13	22	1
F21413.1	2T85MXJ19-T-05	16	2
F49822	2T85MXJ19-T-06	8	1
F49962	2T85MXJ19-T-11	16	1
F49976	2T85MXJ19-T-10	4	2
F73416	2T85MXJ19-T-11	8	1
ND	2T85MXJ19-T-02	4	1

2T85SMXJ23-T

TELAIO - FRAME

-

	2T85MXJ22-T-03	12	2