USES AND
RACOMMENDS

www.tmracing.it

TM Racing SpA - Via Fano, 6
61122 Pesaro - ITALY
Phone: +39 0721 25113

2T250FIEN22-M

MOTORE

ENGINE

06/03/2022

INFORMAZIONI GENERALI

Il presente catalogo serve per richiedere con esattezza le parti di ricambio.
Nelle ordinazioni indicare:

1) Il numero di matricola del Telaio che è stampigliato sul lato destro del canotto di sterzo. Nei modelli EN, SMR, SMR il numero di matricola è riportato anche su una targhezza posta sul lato sinistro (Vedi foto).

2) il numero di serie del Motore. E' posto sulla sinitra del motore tra la leva cambio e i coperchio accensione (Vedi foto).

3) Il codice dei particolari seguito dalla descrizione.

4) Il colore per i pezzi verniciati o comunque colorati.

Le indicazioni destra e sinistra si riferiscono ai lati del veicolo rispetto al senso di marcia.

Foto e disegni sono solo a scopo informativo e potrebbero non corrispondere esattamente alle caratteristiche dei prodotti.

GENERAL INFORMATION

The present spare parts catalogue enables one to order exactly the right spare part.
When ordering specify:

1) The frame serial number. It is embossed on the right side of the steering metal tube. In the EN, SMR and SMR models, the serial number is also stated on a plate positioned on the left hand side (See photo).

2) The engine serial numer. It is located on the left side of the engine between the gear lever and the ingnition cover (See photo).

3) The part's code number followed but its description.

4) Indicate colour for painted or coulored parts.

References to right and left apply to the vehicle in therms of its direction of movement.

Photos and drawings are for informational purposes only and may not exactly match the characteristics of the products.

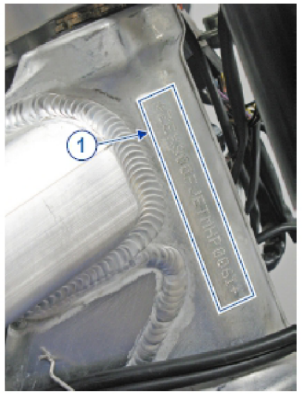

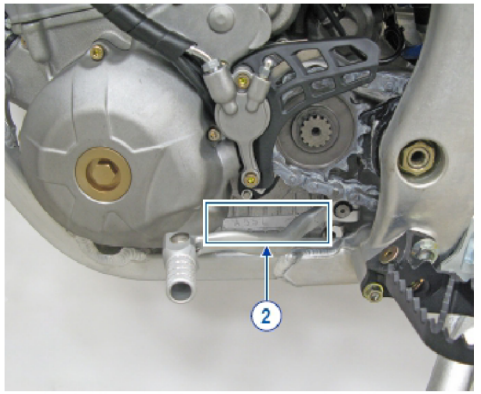

NOTE – LEGENDA

MY	NOVITA' INTRODOTTA DIFFERENTE O NON PRESENTE NEL MODELLO DELL'ANNO PRECEDENTE *PART DIFFERENT OR NOT PRESENT IN THE REVIOUS YEAR MODEL*
5M	MOTORE CON CAMBIO A 5 MARCE *ENGINE WITH 5 GEARS SPEED*
6M	MOTORE CON CAMBIO A 6 MARCE *ENGINE WITH 6 GEARS SPEED*
KS	MOTORE CON SOLO KICK STARTER *ENGINE WITH KICK STARTER ONLY*
ES	MOTORE CON AVVIAMENTO ELETTRICO *ENGINE WITH ELECTRIC STARTER*
X	RICAMBIO NON DISPONIBILE ALLA VENDITA *PART CAN NOT BE SOLD SEPARATELY*

Le illustrazioni riportate in questo manuale sono fornite solo come riferimento e possono variare dal prodotto effettivo,

Dati indicativi soggetti a modifiche senza impegno di preavviso.

The illustrations in this manual are for reference only and may vary from the actual product.

All data are subject to modification without prior notice.

2T250FIEN22-M
MOTORE - ENGINE

CILINDRO - CYLINDER.... 4
MOTORINO VALVOLA - ELECTRIC VALVE SYSTEM.... 7
ALBERO MOTORE - PISTONE - CRANKSHAFT - PISTON.... 9
CARTER FRIZIONE - CLUTCH CASE.... 11
FRIZIONE 6M.... 13
BASAMENTO - CONTRALBERO - CRANKCASE - BALANCE SHAFT.... 16
FORCHETTE CAMBIO 6M.... 19
CAMBIO 6M - GEAR BOX.... 22
MESSA IN MOTO - KICK STARTER.... 25
ACCENSIONE - IGNITION.... 27
- 29

CILINDRO
CYLINDER

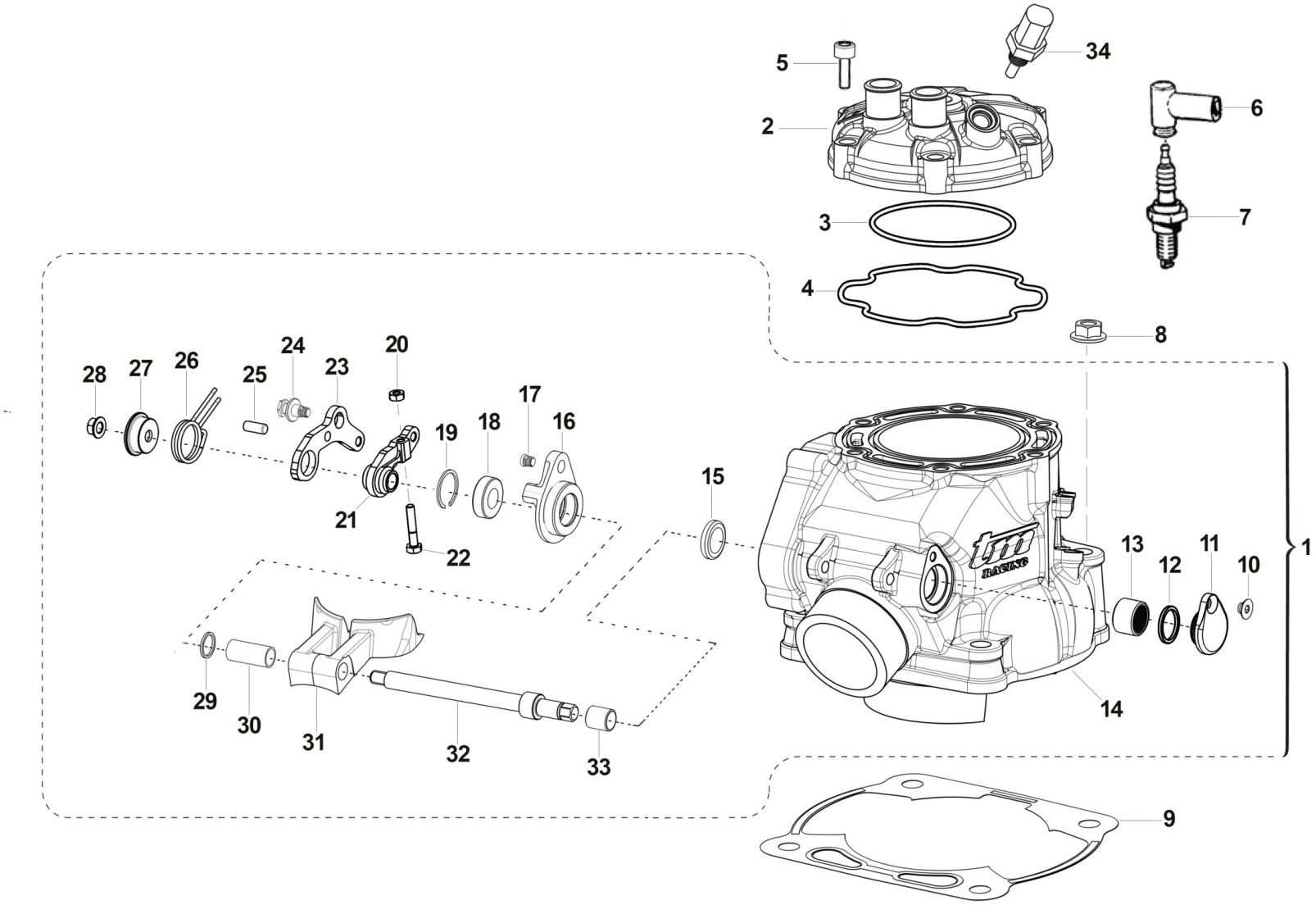

1	01270	1		CILINDRO 250 MX/E 2T (CARB) CPL 19->	CYLINDER 250 MX/E T.S. (CARB) M.19-> ASSY
2	02257	1		TESTA 250 2T IE	HEAD 250 2S FI
3	12250	1		O RING TESTA PICCOLO 250	O-RING, HEAD 250cc LITTLE
4	12263	1		O RING 250/300 SPECIALE TESTA M.15->	O-RING 250/300 HEAD BIG M.15
5	49503	8		VITE TCEI 8X35 UNI 5931	BOLT TCEI 8X35
6	21017	1		PIPETTA CANDELA NGK LB05EMH	CAP, NGK SPARK PLUG LB05EMH
7	06036	1		CANDELA 250/300 2T M19-> NGK BKR8EIX	SPARK-PLUG 250/300 2S MY19-> BKR8EIX
8	F49874	4		DADO M 10 X 1,25 CH 12 FLANGIATO	NUT FLANGED M 10x1,25 T.12mm
9	05280.20	1		GUARN. B/CIL 250 sp. 0.2 M.15->	GASKET, CYL 250 M.15 0,2
9	05280.30	1		GUARN. B/CIL 250 sp. 0.3 M.15->	GASKET, CYL 250 M.15 0,3
9	05280.40	1		GUARN. B/CIL 250 sp. 0.4 M.15->	GASKET, CYL 250 M.15 0,4
9	05280.50	1		GUARN. B/CIL 250 sp. 0.5 M.15->	GASKET, CYL 250 M.15 0,5
10	49399	1		VITE TSEI 5X12	BOLT TSEI 5x12
11	30217	1		TAPPO SX ALB.COM.VALV.PAL.125	SIDE COVER
12	F12308	1		O RING 17,5 - 1,5	O-RING 17,5 - 1,5
13	19044	1		GABBIA A RULLI FRENO POST.	NEEDLE BUSH REAR BRAKE PEDAL
14	01269	1		CILINDRO 250 MX/E 2T (CARB) NUDO 19->	CYLINDER 250 MX/E (CARB) MY19
15	04115	1		PARAOLIO G 12X18X3	OIL SEAL 12x18x3
16	26258	1		FLANGIA PORTACUSC.ALB.VALV.250/300 IE	FLANGE, BEARING HOLDER
17	49757	1		VITE TBCE 5 X 12	BOLT TBCE 5X12
18	03156	1		CUSCINETTO V.SC.C.12 698LLU/5K	BUSH, EXHAUST VALVE 698LLU
19	49220	1		SEEGER INT.19	SEEGER I 19
20	49630	1		DADO M 4 (BASSO)	NUT 4mm, LOW
21	28262	1		LEVA INTERNA COMANDO VALVOLE EES-2 250/300 2019	LEVER, INTERNAL, 250/300
22	49738	1		VITE TE 4X20	BOLT TE 4X20
23	28263	1		LEVA ESTERNA COMANDO VALVOLE EES-2	LEVER, EXTERNAL, VALVE
24	26168	1		PERNO MOLLA EES-2 16066	PIN, SPRING
25	F19536	1		RULLO D. 5 X 12 M6 DIN 6325	PIN 5X12

26	16066	1		MOLLA EES-2	SPRING EES-2
27	26167	1		PIATTELLO GUIDA MOLLA EES-2 16066	COLLAR, SPRING
28	49676	1		DADO M 6X1 FLANG. AUTOBL.ACC.	NUT, FLANGED M6 X 1 S.B.
29	26130.12	1		SPESS. REG. CIL.125 2012 1.2	SPACER CYL. 125 ->12 1.2
29	26130.13	1		SPESS. REG. CIL.125 2012 1.3	SPACER CYL. 125 ->12 1.3
29	26130.14	1		SPESS. REG. CIL.125 2012 1.4	SPACER CYL. 125 ->12 1.4
29	26130.15	1		SPESS. REG. CIL.125 2012 1.5	SPACER CYL. 125 ->12 1.5
29	26130.16	1		SPESS. REG. CIL.125 2012 1.6	SPACER CYL. 125 ->12 1.6
29	26130.17	1		SPESS. REG. CIL.125 2012 1.7	SPACER CYL. 125 ->12 1.7
29	26130.18	1		SPESS. REG. CIL.125 2012 1.8	SPACER CYL. 125 ->12 1.8
29	26130.19	1		SPESS. REG. CIL.125 2012 1.9	SPACER CYL. 125 ->12 1.9
30	26147	1		BOCCOLA DIST. CIL.250/300 2015	BUSH
31	22261.19	1		VALVOLE SCARICO 250 2T ES MY 2019	VALVES, EXHUAST 250 2S MY19
32	28256	1		ALBERO COMANDO PALETTE 250	SHAFT BOOSTER 250/300
33	19061	1		BOCCOLA IR 8X12X12.5	BUSH, IR 1X12X12,5
34	08014	1		SENSORE TEMP. ACQUA TESTA 250/300 2T F.I. 19	SENSOR, WATER TEMPERATURE HEAD 250/300 2T Fi 19->

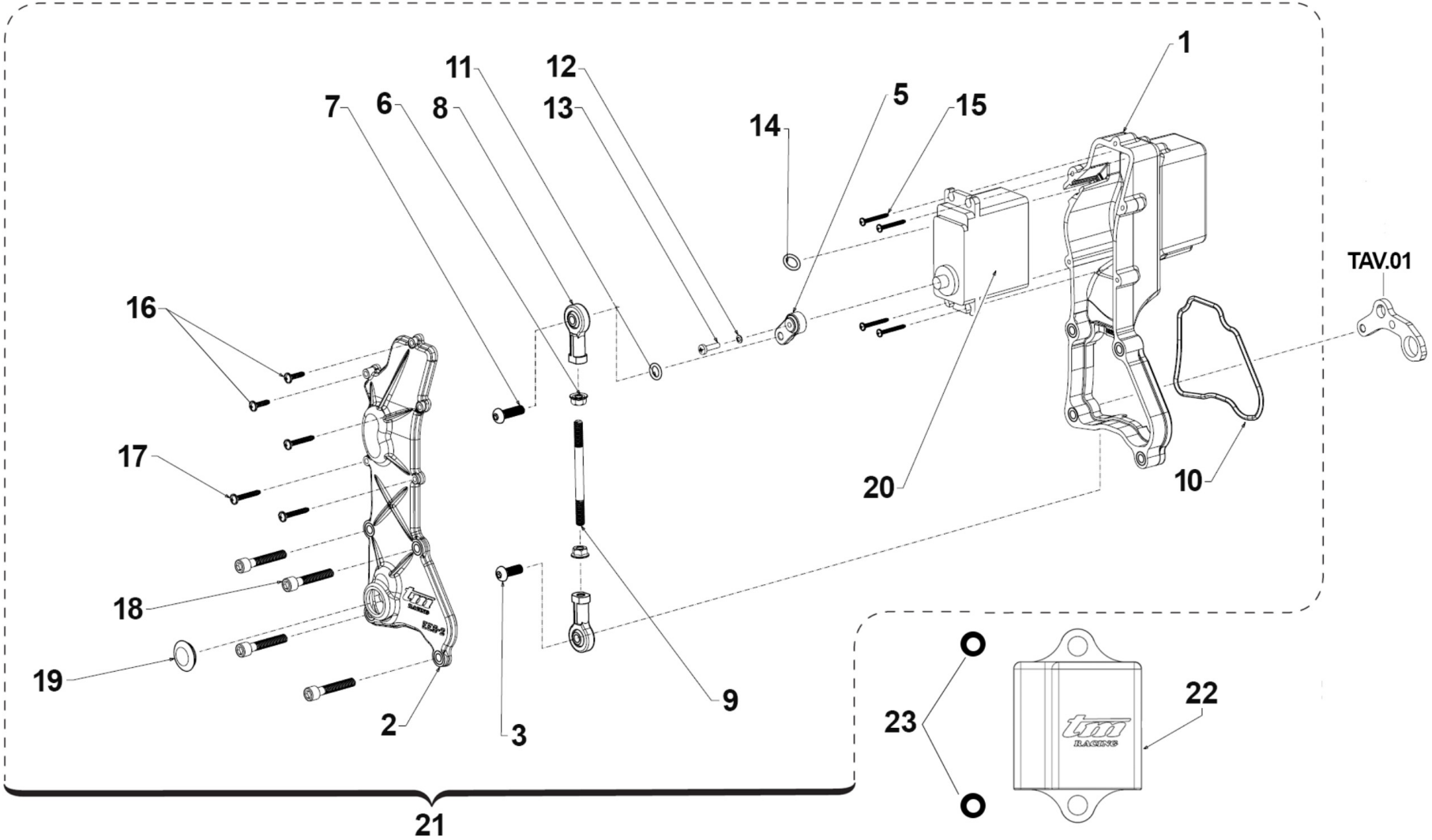
1
2
3
5
6
7
8
9
10
11
12
13
14
15
16
17
18
19
20
21
22
23
TAV.01

1	30285	1		CARTER EES-2 250/300 2T IE	BOX, PLASTIC
2	30286	1		COPERCHIO CARTER EES-2 250/300 2T IE	COVER, PLASTIC
3	49890	1		VITE TBCEI 5 x 14 UNI 7380 10.9	SCREW TBCE 5X14
5	28266.0	1		LEVA SERVOMOTORE EES-2 DENTATURA 0	LEVER
5	28266.1	1		LEVA SERVOMOTORE EES-2 DENTATURA 1	LEVER
6	49632	2		DADO M 5 x 0,8 ZB	NUT 5mm
7	49929	1		VITE 10.9 TBCEI 5 x 18 UNI 7380	BOLT
8	72251	2		SNODO MECCANISCO VALVOLA EES-2 125/250/300	JOINT EXHAUST VALVE EES-2 250/300
9	28264	1		ASTINA COLLEGAMENTO UNIBALL EES-2 250/300 2019	ROD UNIBALL EES-2 250/300 2S MY19->
10	12042	1		O RING COP. VALVOLA EES-2	O-RING
11	F12301	1		O RING 106 4T PIOGGIA CAMBIO	O-RING, 106 GEAR F.S.
12	49124	1		RONDELLA SCHNORR ZIG. 2.5	
13	49881	1		VITE T.C. 2,5X12	
14	F12321	1		O RING BOCCOLA CENTR. CILINDRO	O-RING
15	49973	4		VITE STS-Plus KN6031 2.2X20 PLASTICA	BOLT
16	49984	2		VITE TCBL 3.0 X 12 FL. PLASTICA	BOLT
17	49919	3		VITE TCBL 3.0X 20 FL. X PLAST.	BOLT
18	49478	4		VITE TCEI 5X30 UNI 5931	BOLT TCEI 5X30
19	21009	1		TAPPO GOMMA COPERCHIO VALV.SC.	RUBBER, COVER
20	22500	1		SERVOMOTORE VALV.SCARICO HITEC	EL. ENGINE EXHAUST VALVE HITEC
21	22503.19	1		SERVOMOTORE V/SC. CPL 250/300 ES MY 2019	EL. ENGINE EXHAUST, ASSY
22	08023	1		CENTRALINA COMANDO VALV.SC. 250/300 EES-2 125 Fi	ECU EXHAUST VALVE CONTROL 250/300 2S EES-2
23	F21444	2		GOMMINO CENTRALINA COMANDO VALV. MY 2019	RUBBER ECU HOLDER EXHAUST VALVE M.19->

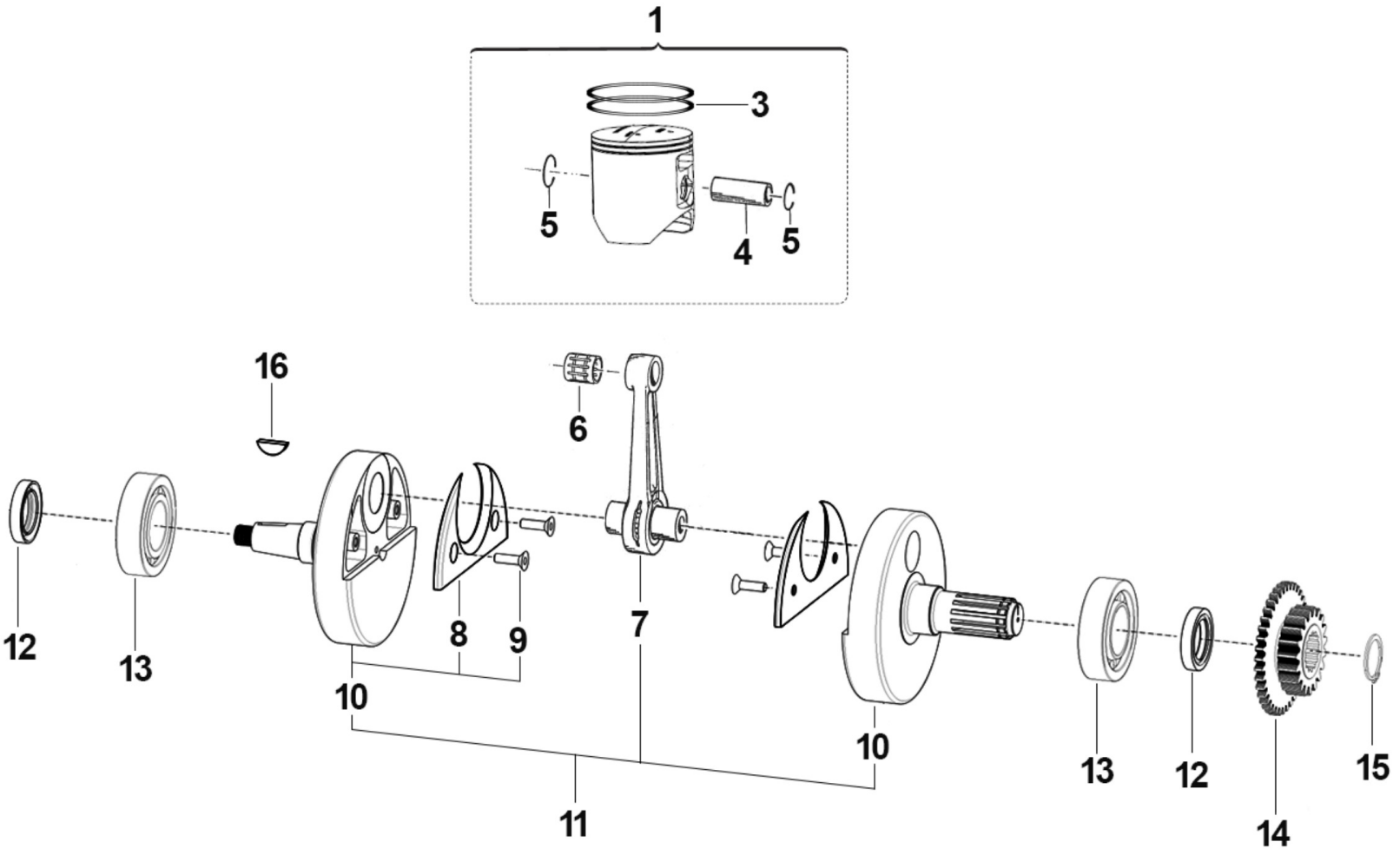
1
3
5
4
5
16
6
12
13
10
8
9
7
10
11
13
12
14
15

1	10513.33	1		PISTONE 66,33 2F 250 CPL M. 19->	PISTON 66,33 2S 250 ASSY MY19->
1	10513.34	1		PISTONE 66,34 2F 250 CPL M.19->	PISTON 66,34 2 RINGS
1	10513.35	1		PISTONE 66,35 2F 250 CPL M.19->	PISTON 66,35 2 RINGS
1	10513.36	1		PISTONE 66,36 2F 250 CPL M.19->	PISTON 66,36 2 RINGS
3	11251	2		SEGMENTO 250 CC	PISTON RING 250cc
4	09250	1		SPINOTTO PISTONE 250/300cc	PIN, PISTON 250/300cc
5	09251	2		ANELLINO FERMA SPINOT.250/300	CLIP, PISTON PIN 250/300
6	19250	1		GABBIA SPINOTTO 250/300 cc	TOP END BUSH 250/300cc
7	18246	1		BIELLA 250/300 M.05/-> P. CPL	CONROD KIT, 250/300 M.05/->
8	18270	2		GUANCETTA SEMIALB. 250/300Fi	STUFFERS, CRANKSHAFT
9	49404	4		VITE TSEI 6X16	BOLT TSEI 6x16
10	18268	1		COPPIA SEMIALBERI 250/300 EV18	CRANK LH + RH
11	18266.19	1		ALBERO MOTORE 250/300 2T ES MY 2019	CRANKSHAFT 250/300 2S FI MY.19
12	04112	2		PARAOLIO 25X38X7 125 MF1 / 250/300	OIL SEAL 25 x 38 x 7
13	03055	2		CUSCINETTO 6206 ALBERO MOTORE 250/300 2T FI	BUSH 6206 6206 CRANKSHAFT 250/300 2S FI
14	40282	1		PIGNONE C.PRIM.250/300 Z20 PER CONTRALBERO	
15	49252	1		SEEGER PIGNONE CATENA 250 E 25	CIRCLIP D.25 FRONT SPROKET 250
16	49012	1		CHIAVETTA PIGNONE COPPIA 250	WOODRUFF KEY, 250/300 19x7,5x5

CARTER FRIZIONE
CLUTCH CASE

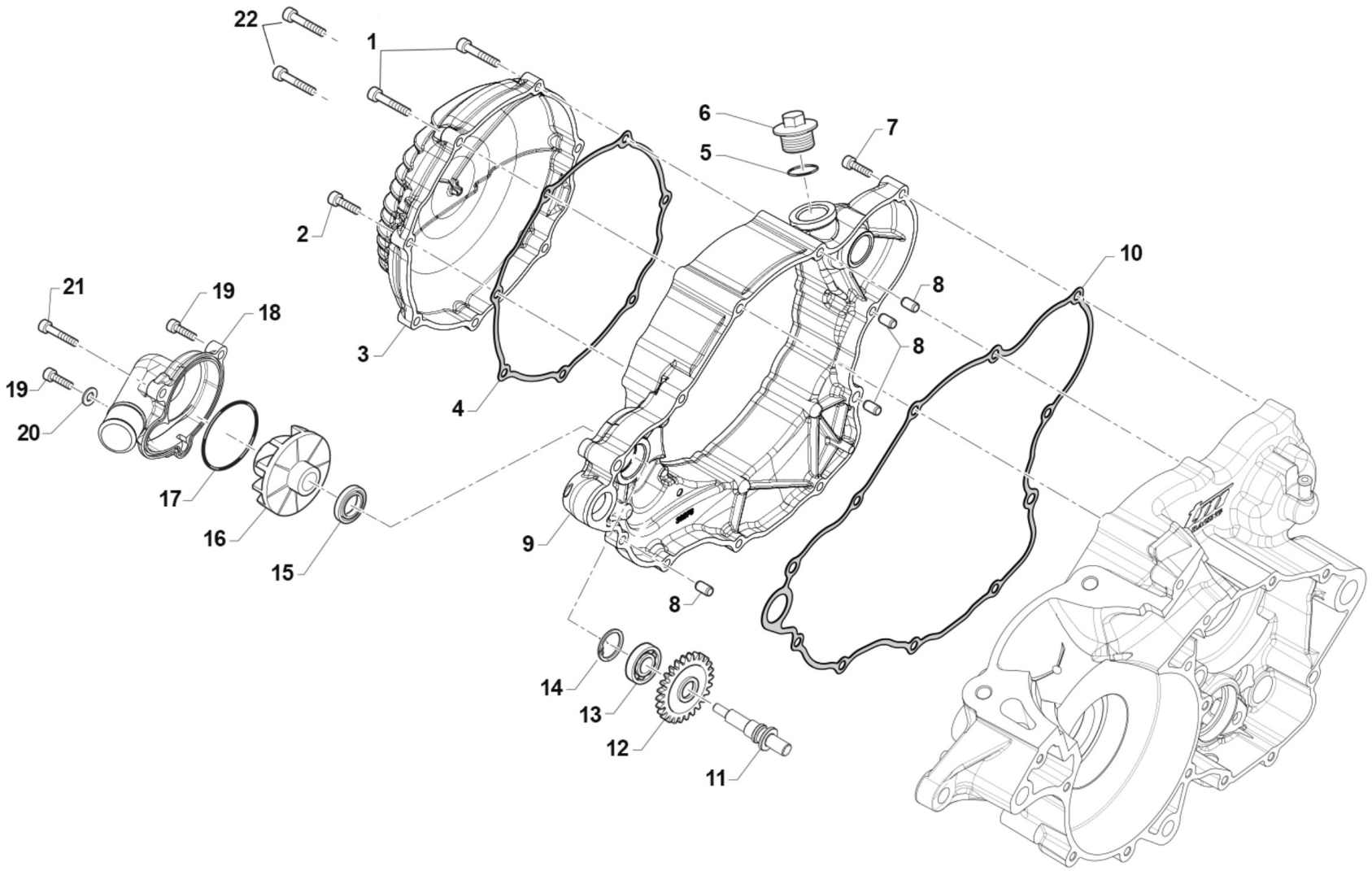

1	49986	2		VITE TCEI 5X75	BOLT TCEI 5 X 75
2	49477	3		VITE TCEI 5X25 UNI 5931	BOLT TCEI 5X25
3	30277	1		COPERCHIO FRIZIONE 250/300 2T MY'19	COVER, CLUTCH 250/300 TS M.19->
4	05284	1		GUARN. COP. FRIZIONE 250/300 2T ES M19->	GASKET, CLUTCH COVER 250/300 2S ES MY 19
5	F49920	1		RONDELLA ALL 20.4X26X1.5	WASHER 20,4X26X1,5 ALUM.
6	F49925	1		TAPPO CARICO OLIO M20X1.5	OIL PLUG M20X1,5
7	49477	9		VITE TCEI 5X25 UNI 5931	BOLT TCEI 5X25
8	26041	4		GRANO CENTRAGGIO D.7X8 F.5,2	DOWEL PIN 7 x 8 Hole 5,2
9	30288	1	MY20	CARTER FRIZIONE 250/300 2020	COVER, INTERNAL, CLUTCH
10	05285	1	MY20	GUARN. CARTER INT. FRIZ. 250/300 2T ES MY 2020	GASKET, INT. CLUTCH COVER 250/300 2T ES M 20->
11	28068	1		ALBERINO POMPA ACQUA 250 SC.	SHAFT WATER PUMP 250
12	40080	1		INGR COMANDO POMPA H2O 250 Z18	
13	03014	1		CUSCINETTO 608 ZC3 POMPA SCHER	BUSH, WATER PUMP 608 Z C3
14	49215	1		SEEGER I22 POMPA ACQUA	CIRCLIP D.22 WATER PUMP
15	F04363	1		PARAOLIO 8X22X5 250/09->	OIL SEAL 8x22x5 (250F/09)
16	F28679	1		GIRANTE POMPA ACQUA 250N	IMPELLER, H2O PUMP 250Fi
17	12028	1		OR COP. POMPA H2O 2T 250/300 M.18->	O-RING WATER PUMP COVER 2S 250/300 MY.18->
18	30275.20	1		COPERCHIO POMPA ACQUA 250/300 2T Fi MY 2020	COVER, WATER PUMP 250/300 2S ES MY 2019
19	49476	2		VITE TCEI 5X20 UNI 5931	BOLT TCEI 5X20
20	49119	1		RONDELLA 5 x 9 x 1,5 ALLUMINIO	WASHER, 5 x 9 x 1.5 ALLUMINIUM
21	49570	1		VITE TCEI 5X50 UNI 5931	SCREW TCEI 5X50
22	49478	2	MY20	VITE TCEI 5X30 UNI 5931	BOLT TCEI 5X30

FRIZIONE 6M

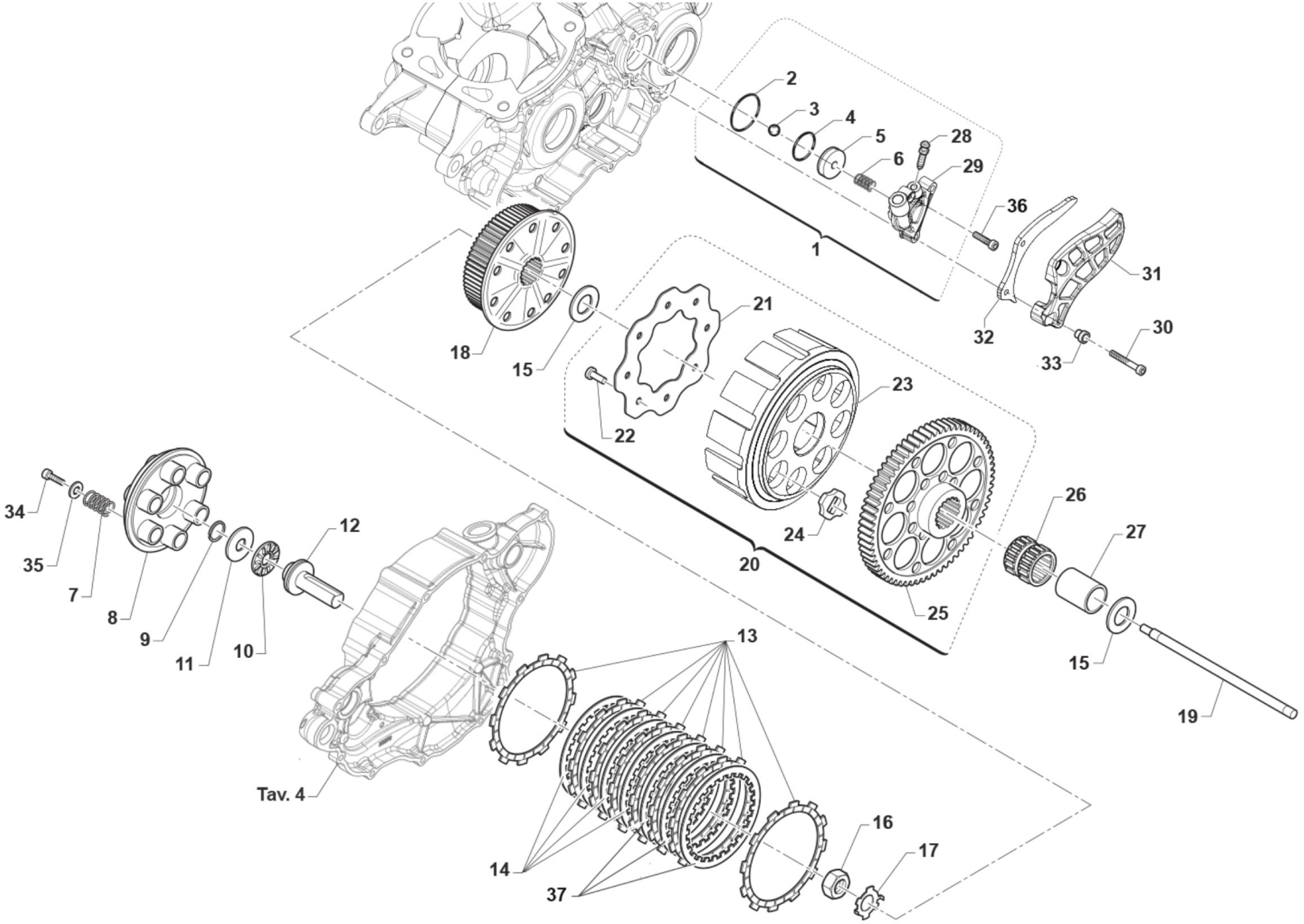
2
3
4
5
28
6
29
36
1
31
21
18
15
32
30
33
23
22
34
26
12
24
27
35
20
7
8
25
9
13
11
10
15
19
Tav. 4
16
17
14
37

1	30265.19	1		COP. FRIZ/IDR 2T 250/300 ES MY 2019 CPL	COVER IDR.CLUTCH 250/300 T.S. ES MY19-> ASSY
2	12091	1		O RING CORPO CARTUCCIA FR.COMP	O-RING
3	F19517	1		SFERA X PIST.FRIZ.IDRAUL.250N	BALL IDR. CLUTCH PISTON 250N
4	12268	1		O RING PISTONE FRIZ.250/300 2T 19 VERDE	O-RING CLUTCH PISTON 250/300 TS M.19->
5	F35559	1		PISTONCINO CIL.FRIZ.D.27XRING	PISTON
6	F16444.4	1		MOLLA DI COMPR.ELIC.K=12/13N/m	SPRING, COMPRESSION 12/13 N/m
7	F16453	6		MOLLA FRIZIONE 2/4T 250/450	SPRING, CLUTCH 2/4T 250/450
8	25253	1		PIATTO SPING. 250/300 + 4T	PLATE, CLUTCH PRESSURE
9	09006	1		ANELLINO FERMA SPINOTTO 80/85/100	CLIP, PISTON PIN 80/85/100cc
10	19022	1		GABBIA A RULLI RAD. AXK 1528	BUSH CAGE AXK 1528, RADIAL
11	19023	1		RONDELLA GABBIA RULLI AS 1528	WASHER, NEEDLE CAGE AS 1528
12	F35582	1		FUNGO FRIZIONE IDRAULICA 2015	PIECE, CLUTCH LIFTER
13	F35589	8		DISCO FRIZIONE 141-E7G02-00 2T/4T FCC	CLUTCH FRICT. PLATE 141-E7G02-00 2T/4T FCC
14	35254	4		DISCO FRIZ. ACC. 1,5 mm 250+4T	CLUTCH PLATE, STEEL 1,5mm94/98
15	48250	2		SPESSORE COPPIA PRIMARIA 250	SPACER, PRIMARY GEAR 250cc
16	49060	1		DADO TAMBUR.FRIZ. ALB.PRIM. 250/300 M18X1.5	NUT, CLUTCH CENTER 250cc
17	35050	1		RONDELLA X FRIZ. 250/300/4T	CLUCTH WASHER 250/300/F
18	25255	1		TAMBURELLO FRIZIONE 250/300 2T ES MY 2019	CENTRAL HUB
19	35503	1		ASTINA FRIZIONE IDRAULICA 250/300 IE M19	ROD, CLUTCH
20	40245.21	1		COPPIA PRIM. 250/300 2T ES z57 CPL 6 MARCE	
21	35262.1	1		DISCO BATTUTA GOMMINI FRIZ. 2T/4T F.7 MMPER VITI 49727	
22	49727	8		VITE PARASTRAPPI K9 M7X1X12.5	SCREW, M7X1X12,5 K9 ENGINE
23	25254	1		CAMPANA FRIZIONE 250 / 300 M.19->	CLUTCH BASKET 250/300 MY 19->
24	21005	8		GOMMINO PARASTRAPPI FRIZIONE	RUBBER, CLUTCH BASKET
25	40283	1		CORONA COPPIA PRIM. 250/300 2T ES Z57 PER PIGNONE Z20	
26	F19510	1		GABBIA A RULLINI K 27X32X23.8	NEEDLE CAGE 27 x 32 x 23.8
27	F26422	1		BOCCOLA INGR.TRASM.PRIM. 250N	BUSH, PRIMARY GEAR 250Fi

28	35264	1		VITE SPURGO OLIO FRIZ.IDR.6X1	SCREW AIR BLED HYDRAUL.CLUTCH
29	30269	1		COP. FRIZ/IDR NUDO 250/300 M19	COVER IDR. CLUTCH 2S 250/300 MY19->
30	49535	2		VITE TCEI 5X35 UNI 5931	BOLT TCEI 5X35
31	40075	1		PROTEZIONE PIGNONE 250/300 IE	PROTECTION, PLASTIC
32	40042	1		PROTEZIONE PIGNONE ERGAL 250/300 2T ES MY 2019	PROTECTION, ERGAL
33	26211	2		BOCCOLA PROT. PIGNONE 250 F.5	COLLAR, SPROCKET 250cc H.5
34	49484	6		VITE TCEI 6X20	BOLT TCEI 6X20
35	49604	6		RONDELLA 6 X18 X 1,6	WASHER 6x18
36	49474	1		VITE TCEI 5X16 UNI 5931	BOLT TCEI 5X16
37	35250	3		DISCO FRIZ. ACC. 1,8 mm 250+4T	CLUTCH PLATE, STEEL 1,8mm 250

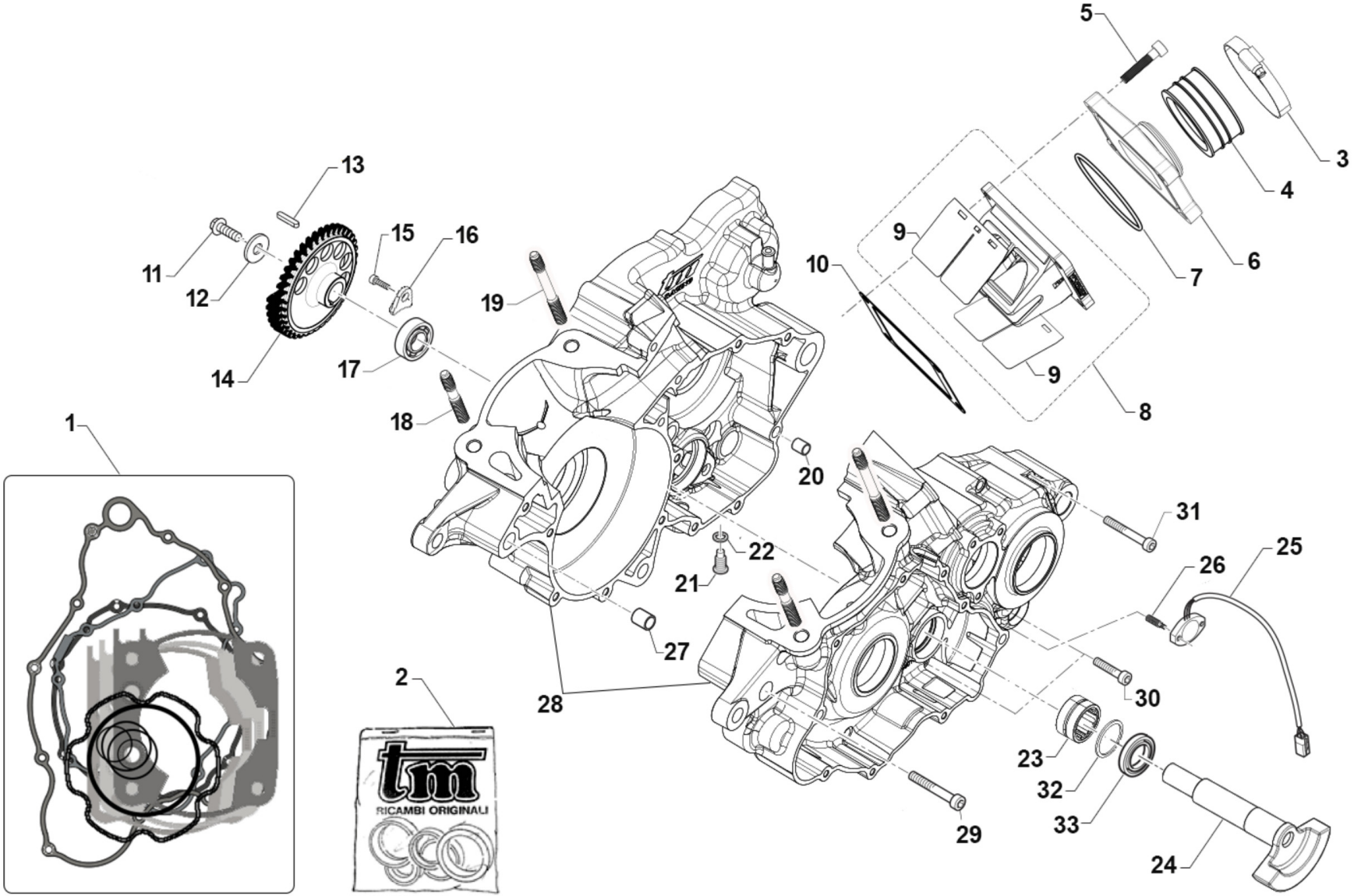
5
3
4
6
7
9
10
9
8
13
15
16
11
12
19
14
17
18
1
20
31
22
25
26
21
27
2
28
30
23
32
33
29
24
RICAMBI ORIGINALI

1	05610.20	1	MY20	KIT GUARNIZIONI + OR 250cc 2T ES MY2020	GASKETS + OR 250 2S ES MY 2020
2	04029.19	1		KIT PARAOLI 250/300 2T ES MY 2019	OIL SEAL KIT 250/300 2T ES MY 2019
3	51054	2		FASCETTA SM9 D.52	CLAMP SM9 D.52mm
4	13009	1		MANICOTTO COLLETTORE ASP.97/14	MANIFOLD RUBBER,INTAKE M.97/14
5	49486	4		VITE TCEI 6X30 UNI 5931	BOLT TCEI 6X30
6	30314.14	1		CONVOGL. P/LAM 250/3 14/-> VF3	MANIFOLD, INTAKE
7	12255	1		O RING COLLETT.ASP.250/300 14	O-RING, INLET MANIFOLD 250/300
8	20258	1		PACCO LAM 250/300 VF3 07/->	REEDS BOX VF3 250/300 M. 07/->
9	20076	1		LAMELLE V-FORCE3 250/300 07/->	REEDS, V-FORCE3 250/300 07/->
10	05268	1		GUARN. PACCO LAMELLE 250	GASKET, REED BLOCK 250/300
11	49363	1		VITE TE F/R 8X16 Ch.10	BOLT 8X16 T.10mm
12	49100	1		RONDELLA TESTATA 8,5x18x3 ZB	WASHER, HEAD 8x18x3
13	49969	1		CHIAVETTA CONTRALBERO 250/300 2T A 3X3X12	WOODRUFF KEY
14	40257	1		INGR. CONTRALBERO 250/300 M18	GEAR, BALANCE SHAFT
15	49962	1		VITE TCEI 6X12 BASSA / F.GUIDA	BOLT
16	26156	1		PIASTRINO BLOC.CUSC.C.A.125 OK /250/300	PLATE, BEARING HOLDER 125 OK
17	03049	1		CUSCINETTO CONTRALBERO MOTO 2T	BUSH, COUNTERSHAFT 2S BIKE
18	49044	2		PRIGIONIERO CARTER/CILIND.250/300 ES Ant.	STUD, M10 X 1.25 L.57
19	49045	2		PRIGIONIERO CARTER/CILIND. 250/300 ES Post.	STUD, M10 X 1.25 L.81,5
20	F26304	1		GRANO RIFERIMENTO 6.5X8X9.5 4T	GRUB SCREW 6.5X8XX9.5 4S
21	49301	1		TAPPO OLIO C/CALAM. 2T	OIL PLUG WITH MAGNET
22	49103	1		RONDELLA 14X20X1,5 ALLUMINIO	WASHER, 14 X 20 X 1.5 ALUMINUM
23	19072	1		ASTUCCIO A RULLI NK 2016 250/300 2T I.	
24	18267	1		CONTRALBERO 2T 250/300 ES MY 2019	BALANCE SHAFT
25	F08459	1		SENSORE POSIZIONE CAMBIO eM060 CPL G.ANTIORARIO	
26	49713	2		GRANO 6X20 FRIZ. KART-CROSS	GRUB SCREW
27	F26428	1		GRANO RIFERIMENTO 12X13 F10.2	GRUB SCREW 12X13 H.10,2mm
28	30280.20	1	MY20	BASAMENTO MOTORE 250 2T ES MY 2020	CRANKCASE 250 2S ES MY20

29	49508	1		VITE TCEI 8X60 UNI 5931	BOLT
30	49487	3		VITE TCEI 6X35 UNI 5931	BOLT TCEI 6X35
31	49490	11		VITE TCEI 6X50 UNI 5931	BOLT TCEI 6X50
32	F49915	1		SEEGER I28 FILTRO COPPA OLIO (J28 x fori)	SEEGER OIL FILTER
33	04035	1		PARAOLIO 20x30x7 PTFE	OIL SEAL 20 x 30 x 7 PTFE

FORCHETTE CAMBIO 6M

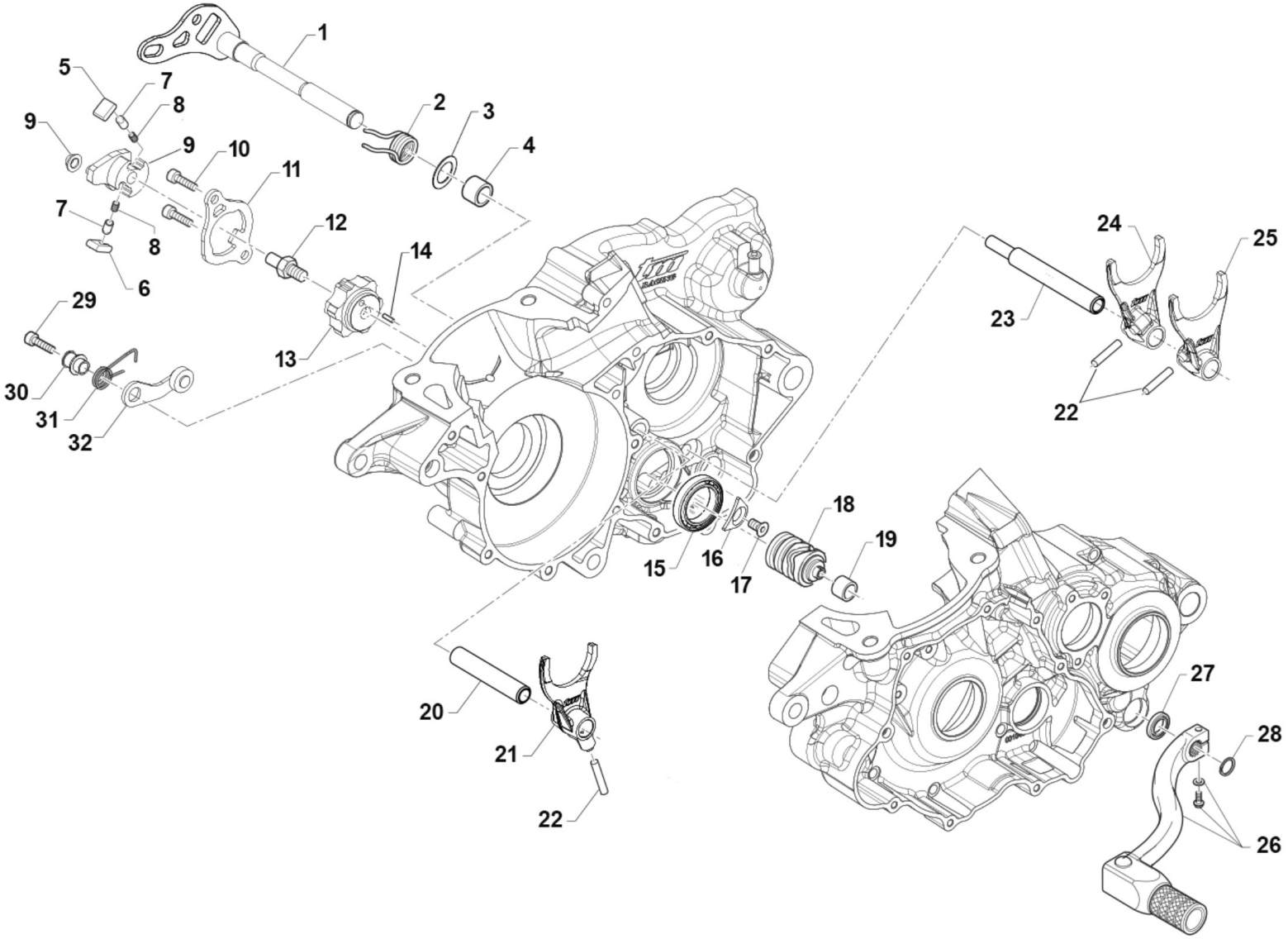

FORCHETTE CAMBIO 6M

1	28105	1		ALBERO COMANDO CAMBIO 250/300 IE CPL	SHAFT, GEARSHIFT 250/300 IE CPL
2	16065	1		MOLLA RITORNO LEVA CAMBIO 250 2T IE	SPRING, RETURN GEAR LEVER 250 2S EI
3	49073	1		RONDELLA 12,1X22X1	WASHER 12,1X22X1 125 MF1/2
4	19060	1		ASTUCCIO A RULLI HK 1212	NEEDLE CAGE HK 1212
5	F26587	1		CRICCHETTO SX (HT) 250 M3	RATCHET, LF GEAR (HT) 250 M3
6	F26588	1		CRICCHETTO DX (HT) 250 M3	RATCHET, RH GEAR (HT) 250 M3
7	F26592	2		PUNTALE CRICCHETTO (HT)	PIN, RATCHET GEAR (HT)
8	F16469	2		MOLLA PER PUNTALE EDM	SPRING, GEARBOX PIN EDM
9	F26620	1		PORTACRICCHETTI HT 250MX	GEAR
10	49482	2		VITE TCEI 6X14 UNI 5931	BOLT TCEI 6X14
11	26160	1		PIASTRINO RIENTRO CRIC.250 M18	PLATE
12	F49873	1		PERNO FILETTATO PER PORTACRICCHETTI (HT)	THREADED PIN FOR RATCHET HOLDER (HT)
13	F26589	1		TESTA ALBERO DESMODROMICO (HT)	CAM, HEAD
14	F19504	1		RULLO D.4 X 8	PIN D.4 X 8
15	F03381	1		CUSCINETTO 61805	BUSH 61805
16	F48352	1		PIASTRINO FISSA CUSCINETTO D72	PLATE
17	49403	1		VITE TSEI 6X12 ZINCATO	SCREW TSEI 6x12
18	33254	1		ALBERO DESM. 250/300 2T 6M CPL (2020)COMPLETO DI 26164	
19	26260	1		BOCCOLA ALB. DESMODROMICO 250/300 2T I.E.	BUSH
20	33260	1		PERNO FORCHETTA AP 250/300 MY19	PIN, MAINSHAFT FORK
21	33026	1		FORCHETTA ALB.PRIM. 250/300 2T 6M 5^/6^ (2020)	
22	F19533	3		RULLO D.6 X 15	PIN
23	33025	1		PERNO FORCHETTA AS 250/300 MY19	PIN, COUNTERSHAFT FORKS
24	33023	1		FORCHETTA A.S.1^3^ 250/300 M18 1A E 3A	FORK 1, COUNTERSHAFT
25	33027	1		FORCHETTA ALB.SEC. 250/300 2T 6M 2^/3^ (2020)	
26	43049	1		LEVA CAMBIO 250 / 300 2T E.S. 19	GEAR LEVER 250 / 300 T.STR. EL.ST. M.19->
27	04038	1		PARAOLIO LEVA CAMBIO 250/300 2T I 12x20x5 l.parapolv.	OIL SEAL GEAR LEVEL 250/300 2S Fi 12x20x5
28	49212	1		SEEGER E12 LEVA CAMBIO	CIRCLIP D.12 - EXTERNAL

29	49485	1		VITE TCEI 6X25 UNI 5931	BOLT TCEI 6x25
30	26007	1		DISTANZIALE MOLLA BLOCCAMARCE	SPACER, STOP GEAR SPRING
31	F16447	1		NON UTILIZZARE !!! MOLLA BLOCCA MARCE 250Nsostituita da F16447.3	SPRING, STOP GEAR 250 4S
32	F26479	1		PIASTRINO BLOCCA MAR. 250Fi 12	PLATE, STOP GEAR 250 4S 12->

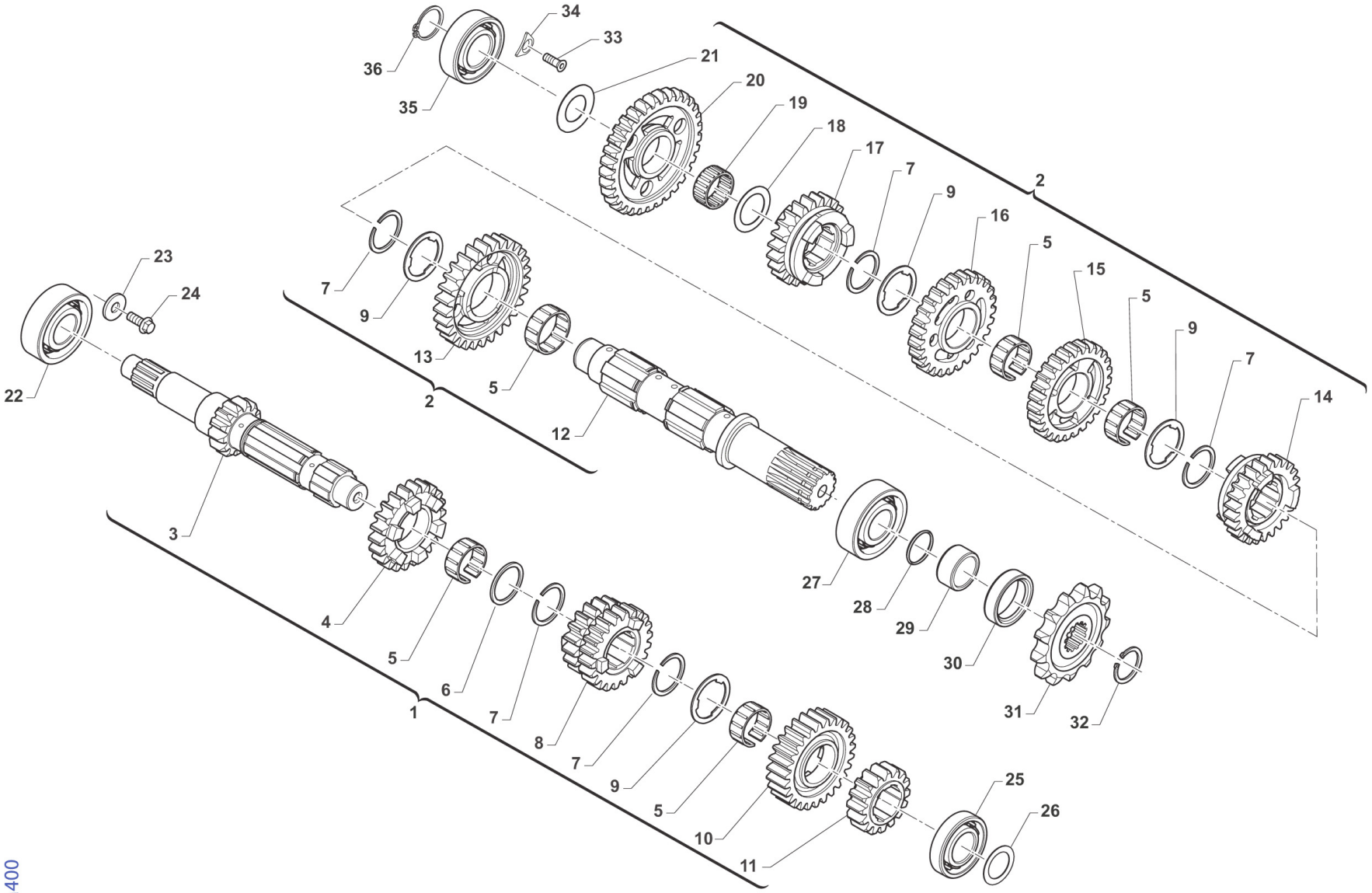
34
33
36
21
35
20
19
18
17
7
9
2
16
5
15
5
9
7
14
23
24
7
9
13
5
2
22
12
3
27
28
29
30
4
5
6
1
7
8
7
9
5
10
11
25
26
31
32

TM400

1	40320	1		ALBERO PRIMARIO EN CPL 250/300 2T ES 6 MARCE	
2	40321	1		ALBERO SECONDARIO EN CPL 250/300 2T ES 6 MARCE	
3	40736	1		ALBERO PRIMARIO Z13 250/300 2T 6M EN MY21	
4	40739	1		INGR A.P. 5^ Z18 6M EN 250/300 2T 450 4T MY21	
5	F19524	5		GABBIA A RULLI 22X26X10 TAGL.	NEEDLE BEARING 22 X 26 X 10
6	48259	1		SPESSORE D.25.1 x 31 x 1.5 CAMBIO INT.55 6M	
7	F49869	5		SEEGER SW 24 (EST.) "SEEGER"	CIRCLIP SW 24 (EXTERNAL)
8	40738	1		INGR A.P. 3^/4^ Z19/20 6M EN 250/300 2T 450 4T MY21	
9	48258	4		SPESSORE DENT.CAMBIO INT.55 6M	SPACER GEAR INT.55 6S
10	40740	1		INGR A.P. 6^ Z23 6M EN 250/300 2T 450 4T MY21	
11	40737	1		INGR A.P. 2^ Z16 6M EN 250/300 2T 450 4T MY21	
12	40741	1		ALBERO SECONDARIO 250/300 2T 6M MY21	COUNTERSHAFT 250/300 TS 6S MY21->
13	40743	1		INGR A.S. 2^ Z26 6M EN 250/300 2T 450 4T MY21	
14	40747.1	1		INGR A.S. 6^ Z18 6M EN 250/300 2T 450 4T INN.MOD. MY21	
15	40744.1	1		INGR A.S. 3^ Z24 6M EN 250/300 2T 450 4T INN.MOD. MY21	
16	40745	1		INGR A.S. 4^ Z21 6M EN 250/300 2T 450 4T MY21	
17	40746	1		INGR A.S. 5^ Z16 6M EN 250/300 2T 450 4T MY21	
18	48252	1		SPESSORE CAMBIO 20X29X1 250	SPACER, GEAR 250 20X29X1
19	19012	1		GABBIA A RULLI K 20X24X10	BUSH NEEDLE CAGE 20 X 24 X 10
20	40742	1		INGR A.S. 1^ Z30 6M EN 250/300 2T 450 4T MY21	
21	48059	1		Spessore alb.sec. 2T IE 17x28x3.5	SPACER
22	03252	1		CUSCINETTO 6205 C4 A/P 250/K9	BUSH, MAINSHAFT 250 / KZ
23	49603	1		RONDELLA M 6,4 X 12 X 1,6	WASHER 6x12
24	49962	1		VITE TCEI 6X12 BASSA / F.GUIDA	BOLT
25	F03379	1		CUSCINETTO 16004 C3	BUSH 16004 C3
26	F48401.30	1		RASAMENTO Ø20,3 x Ø35,9 x 0,30	SHIM
27	03020	1		CUSCINETTO RULLI NJ205ET2XC3 (BANCO 85/100 M.18)	BUSH CRANKSHAFT 85/100->18 NJ205ET2XC3
28	12252	1		O RING PIGNONE CAT.+DIS.AL.MOT	O-RING, 25,12 x 1,78

29	26261	1		DISTANZIALE PIGNONE CAT.250/300 2T 19	SPACER SPROCKET DRIVE 250/300 T.S. MY19->
30	04101	1		PARAOLIO PIGNONE CATENA 250	OIL SEAL 40 x 30 x 7
31	40212	1		PIGNONE CATENA Z12 250	SPROCKET 12T, DRIVE 250/300/4T
31	40214	1		PIGNONE CATENA Z13 250/2T e 4T	SPROCKET 13T, DRIVE 250/300/4T
32	49252	1		SEEGER PIGNONE CATENA 250 E 25	CIRCLIP D.25 FRONT SPROKET 250
33	49403	1		VITE TSEI 6X12 ZINCATO	SCREW TSEI 6x12
34	F48352	1		PIASTRINO FISSA CUSCINETTO D72	PLATE
35	03251	1		CUSCINETTO 6203/C3 A/P A/S 250	BUSH, MAINSHAFT COUNTER.250/4T
36	F49876	1		SEEGER E 17 CAMBIO 250/300 2T 19->	CIRCLIP E 17 GEAR BOX 250/300 2S MY.19->

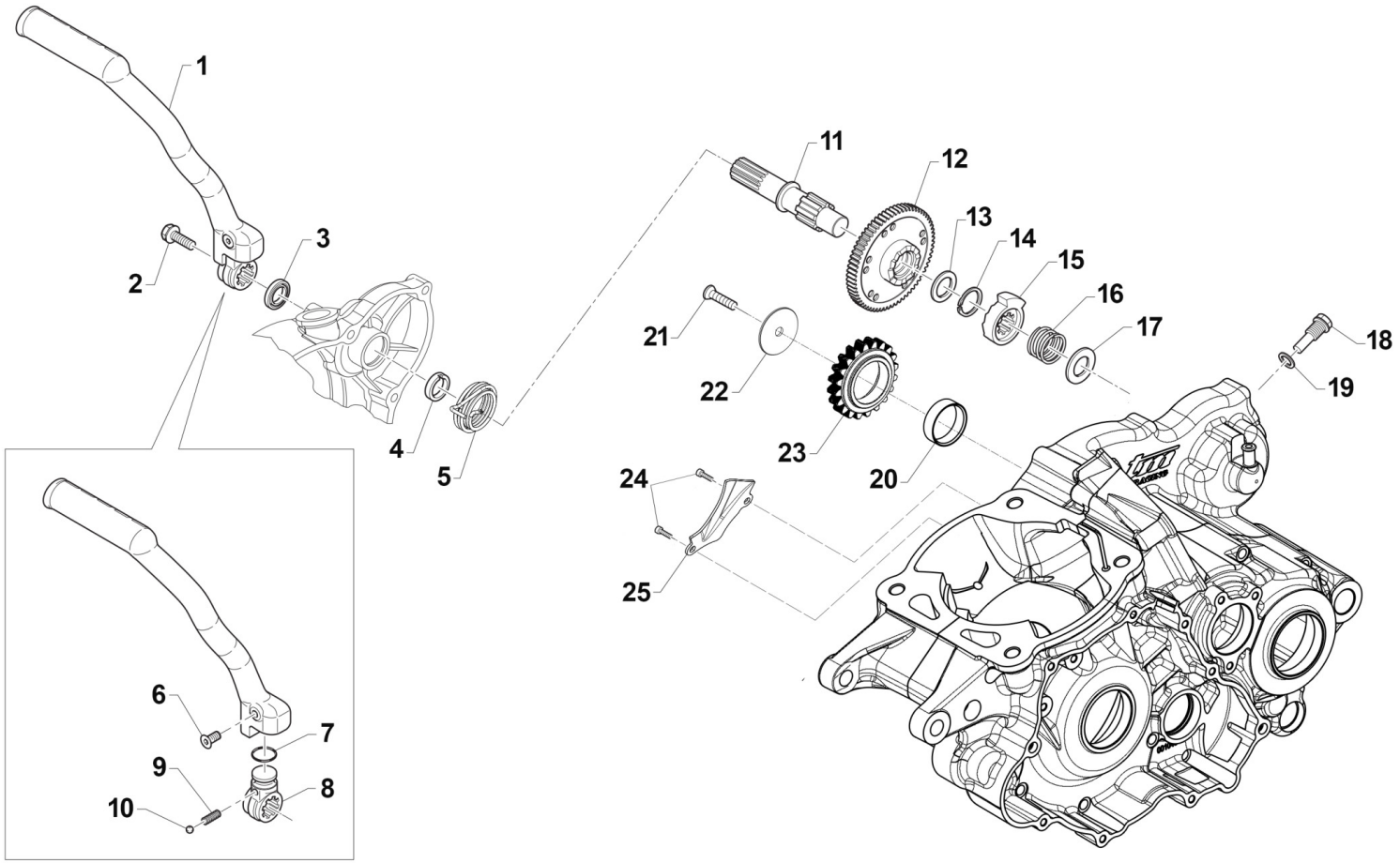
1
2
3
4
5
6
7
8
9
10
11
12
13
14
15
16
17
18
19
20
21
22
23
24
25

1	43250.19	1		LEVA M/M 250/300 2T ES MY 2019	LEVER, KICK STARTER
2	49369	1		VITE TE F/R 8X10 Ch.10 M/M	BOLT 8X10 T.10mm(Kich Starter)
3	F04365	1		PARAOLIO LEVA M/M 250/09	OIL SEAL 18x28x6,5 KS LEVER
4	F26423	1		BOCCOLA MOLLA M/M. 250Fi	BUSH
5	F16428	1		MOLLA RICHIAMO AVVIAMENTO A P.	SPRING, KICK STARTER RETURN 4S
6	49414	1		VITE TSPEI 6X30 NORMALE UNI 5933	BOLT TSEI 6X30
7	12260	1		O RING INTERNO LEVA M/M 250	O-RING INT.LEVER KICK START250
8	F43376	1		MOZZETTO KICK START CORTO 2T (+ 250/300 4T)	BLOCK, KICK STARTER 250N 08->
9	16039	1		MOLLA X SFERA LEVA M/M 250 CC	SPRING, BALL KICK-START. 250cc
10	43250.03	1		SFERA 1/4C X LEVA M/M 250 CC	BALL, KICK STARTER LEVER 250cc
11	F28657	1		ALBERO M/M 250Fi	SHAFT, KICK STARTER
12	40346	1		INGR. CONDUTTORE M/M 250/300	GEAR
13	F48355	1		SPESSORE TT 18 X 23 X 0,5	SHIM 18 X 23 X 0,5
14	F49835	1		SEEGER AV 18	SEEGER
15	F26424	1		BUSSOLA A CRICC.X K.S. 250N	K.STARTER STOPPER CAM 250 4S
16	F16429	1		MOLLA CRICCHETTO AVV.A PEDALE	SPRING
17	F48354	1		SPESSORE TT 14 X 30 X 0,5	SPACER
18	49987	1		VITE DISIMP.CRICCH.M/M.250/300 2T ES MY 2019	BOLT
19	F49939	1		RONDELLA RAME 8 X13 X 1,5	WASHER COPPER 8,5X13X1,5
20	26262	1		BRONZINA ING. FOLLE M/M RINF. 250/300 2T	BUSH
21	49440	1		VITE TE 6X14	BOLT TE 6X14
22	49981	1		RONDELLA 6x31x1.5 x ING.FOLLE RINF. 250/300 2T 2019	WASHER
23	40362	1		INGRANAGGIO FOLLE M/M RINF. 250/300	GEAR
24	49580	2		VITE TCEI 4X10	BOLT
25	26162	1		PIASTRINO CONV.OLIO 250/300 18	PLATE

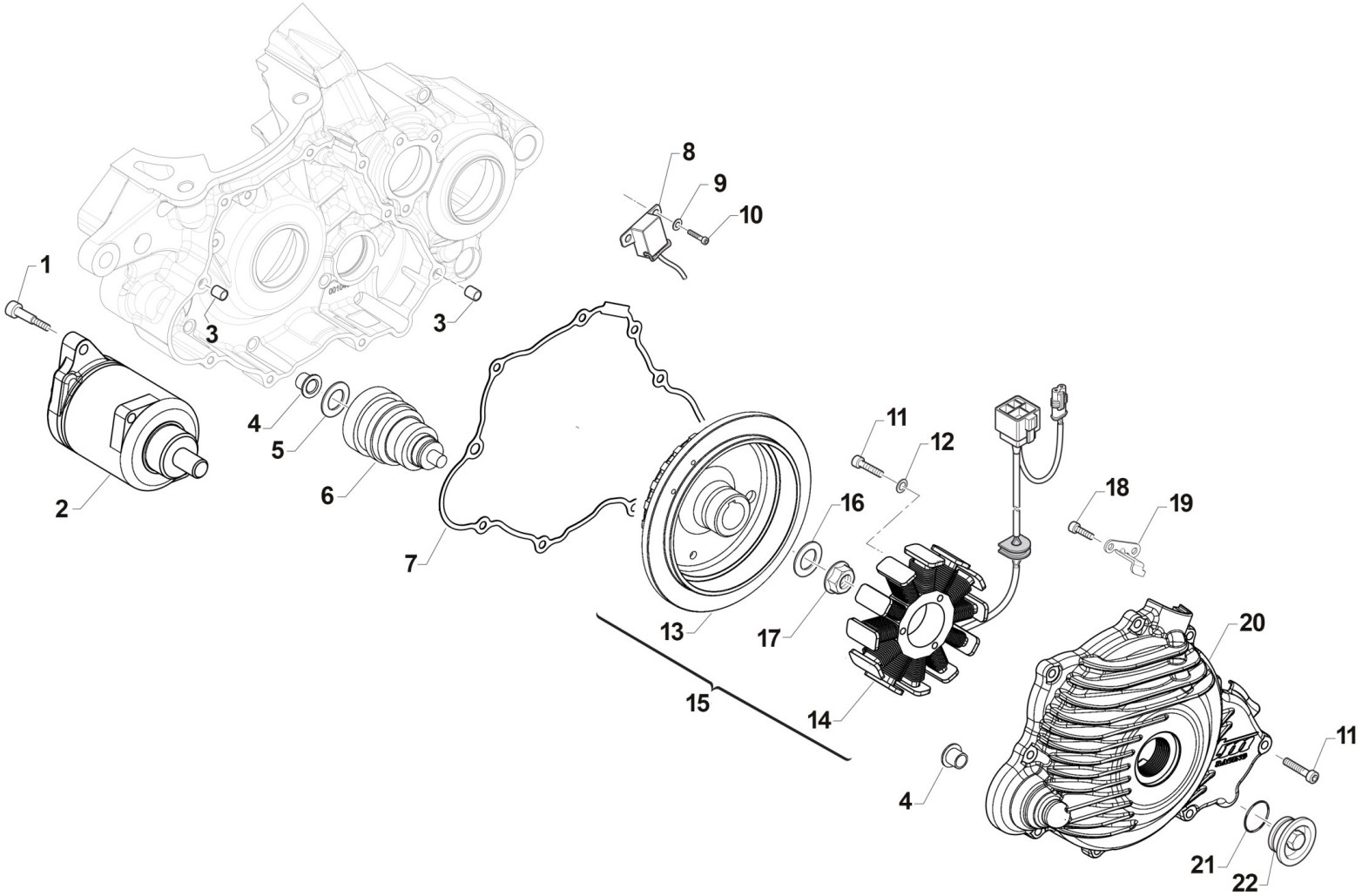
1
2
3
3
4
5
6
7
8
9
10
11
12
13
14
15
16
17
18
19
20
11
4
21
22

1	49485	2		VITE TCEI 6X25 UNI 5931	BOLT TCEI 6x25
2	68206	1		MOTORINO AVVIAMENTO 250/300 M18->	STARTER MOTOR 250/300 T.S. MY19->
3	26041	2		GRANO CENTRAGGIO D.7X8 F.5,2	DOWEL PIN 7 x 8 Hole 5,2
4	26256	2		BOCCOLA FLANGIATA BENDIX AVV. EL. 250/300 2T I.E.	FLANGE BUSH BENDIX EL.ST. 250/300 T.S. Fi
5	72418.23	1		LAMELLA D.8 23-020	
6	68207	1		BENDIX MOTORE 250/300 2T ES MY 2019	BENDIX
7	05260	1		GUARN. COP. ACC. 250/300 2T ES M19->	GASKET, IGNITION COVER 250/300 2S ES MY 19
8	F15478	1		PICK-UP KOKUSAN	PICK-UP KOK PU5157
9	49601	2		RONDELLA 5X11	WASHER 5x11
10	49472	2		VITE TCEI 5X12 UNI 5931	BOLT TCEI 5X12
11	49477	12		VITE TCEI 5X25 UNI 5931	BOLT TCEI 5X25
12	49615	3		RONDELLA ACCIAIO 5x11x0,5	WASHER STEEL 5 mm
13	15247	1		ROTORE X GEN. ES 250/300 2T IE CPL M.19-> in C45	ROTOR, INGNITION 250/300 2T ES MY 2019
13	F50816	1		ESTRATTORE ACC KOK 125Fi + 250/300 2T ES 19->	FLYWHEEL PULLER KOKUSAN 250/300 2S MY.19->
14	F15551	1		STATORE KOKUSAN YS 9022	STATOR KOKUSAN YS 9022
15	15255	1		ACCENSIONE CPL 250/300 2T ES MY 201915247 + F15551	IGNITION ASSY 250/300 T.S. ES MY 19->
16	49613	1		RONDELLA ACCIAIO 12	STEEL WASHER 12
17	49056	1		DADO ACCENS 100/TAG/KZ 125MX/E	NUT, IGNITION 100cc
18	49580	2		VITE TCEI 4X10	BOLT
19	F30945	1		PROTEZIONE CAVI ACC.NE 250N	PROTECTION IGNITION WIRES 250N
20	30278	1		COPERCHIO ACCENSIONE 250/300 2T ES MY 19	IGNITION COVER 250/300 2S E.S. MY19->
21	F12322	1		O RING 2106	O-RING
22	49290	1		TAPPO COPERCHIO ACC. 250/300 2T MY 2019(PUO' SOSTITUIRE F49833)	CAP IGNITION COVER 250/300 2S MY19

2T250FIEN22-M -
MOTORE - ENGINE

01269	2T250FI22-M-01	14	1
01270	2T250FI22-M-01	1	1
02257	2T250FI22-M-01	2	1
03014	2T25022-M6-04	13	1
03020	2T25022-M6-08	27	1
03049	2T25020-M-06	17	1
03055	2T250FIEN21-M6-03	13	2
03156	2T250FI22-M-01	18	1
03251	2T25022-M6-08	35	1
03252	2T25022-M6-08	22	1
04029.19	2T25020-M-06	2	1
04035	2T25020-M-06	33	1
04038	2T25022-M6-07	27	1
04101	2T25022-M6-08	30	1
04112	2T250FIEN21-M6-03	12	2
04115	2T250FI22-M-01	15	1
05260	2T25020-M-10	7	1
05268	2T25020-M-06	10	1
05280.20	2T250FI22-M-01	9	1
05280.30	2T250FI22-M-01	9	1
05280.40	2T250FI22-M-01	9	1
05280.50	2T250FI22-M-01	9	1
05284	2T25022-M6-04	4	1
05285	2T25022-M6-04	10	1
05610.20	2T25020-M-06	1	1
06036	2T250FI22-M-01	7	1
08014	2T250FI22-M-01	34	1

08023	2T25019-M-02	22	1
09006	2T25022-M6-05	9	1
09250	2T250FIEN21-M6-03	4	1
09251	2T250FIEN21-M6-03	5	2
10513.33	2T250FIEN21-M6-03	1	1
10513.34	2T250FIEN21-M6-03	1	1
10513.35	2T250FIEN21-M6-03	1	1
10513.36	2T250FIEN21-M6-03	1	1
11251	2T250FIEN21-M6-03	3	2
12028	2T25022-M6-04	17	1
12042	2T25019-M-02	10	1
12091	2T25022-M6-05	2	1
12250	2T250FI22-M-01	3	1
12252	2T25022-M6-08	28	1
12255	2T25020-M-06	7	1
12260	2T25020-M-09	7	1
12263	2T250FI22-M-01	4	1
12268	2T25022-M6-05	4	1
13009	2T25020-M-06	4	1
15247	2T25020-M-10	13	1
15255	2T25020-M-10	15	1
16039	2T25020-M-09	9	1
16065	2T25022-M6-07	2	1
16066	2T250FI22-M-01	26	1

18246	2T250FIEN21-M6-03	7	1
18266.19	2T250FIEN21-M6-03	11	1
18267	2T25020-M-06	24	1
18268	2T250FIEN21-M6-03	10	1
18270	2T250FIEN21-M6-03	8	2
19012	2T25022-M6-08	19	1
19022	2T25022-M6-05	10	1
19023	2T25022-M6-05	11	1
19044	2T250FI22-M-01	13	1
19060	2T25022-M6-07	4	1
19061	2T250FI22-M-01	33	1
19072	2T25020-M-06	23	1
19250	2T250FIEN21-M6-03	6	1
20076	2T25020-M-06	9	1
20258	2T25020-M-06	8	1
21005	2T25022-M6-05	24	8
21009	2T25019-M-02	19	1
21017	2T250FI22-M-01	6	1
22261.19	2T250FI22-M-01	31	1
22500	2T25019-M-02	20	1
22503.19	2T25019-M-02	21	1
25253	2T25022-M6-05	8	1
25254	2T25022-M6-05	23	1
25255	2T25022-M6-05	18	1
26007	2T25022-M6-07	30	1

2T250FIEN22-M -
MOTORE - ENGINE

26041	2T25020-M-10	3	2
	2T25022-M6-04	8	4
26130.12	2T250FI22-M-01	29	1
26130.13	2T250FI22-M-01	29	1
26130.14	2T250FI22-M-01	29	1
26130.15	2T250FI22-M-01	29	1
26130.16	2T250FI22-M-01	29	1
26130.17	2T250FI22-M-01	29	1
26130.18	2T250FI22-M-01	29	1
26130.19	2T250FI22-M-01	29	1
26147	2T250FI22-M-01	30	1
26156	2T25020-M-06	16	1
26160	2T25022-M6-07	11	1
26162	2T25020-M-09	25	1
26167	2T250FI22-M-01	27	1
26168	2T250FI22-M-01	24	1
26211	2T25022-M6-05	33	2
26256	2T25020-M-10	4	2
26258	2T250FI22-M-01	16	1
26260	2T25022-M6-07	19	1
26261	2T25022-M6-08	29	1
26262	2T25020-M-09	20	1
28068	2T25022-M6-04	11	1
28105	2T25022-M6-07	1	1
28256	2T250FI22-M-01	32	1
28262	2T250FI22-M-01	21	1
28263	2T250FI22-M-01	23	1
28264	2T25019-M-02	9	1

28266.0	2T25019-M-02	5	1
28266.1	2T25019-M-02	5	1
30217	2T250FI22-M-01	11	1
30265.19	2T25022-M6-05	1	1
30269	2T25022-M6-05	29	1
30275.20	2T25022-M6-04	18	1
30277	2T25022-M6-04	3	1
30278	2T25020-M-10	20	1
30280.20	2T25020-M-06	28	1
30285	2T25019-M-02	1	1
30286	2T25019-M-02	2	1
30288	2T25022-M6-04	9	1
30314.14	2T25020-M-06	6	1
33023	2T25022-M6-07	24	1
33025	2T25022-M6-07	23	1
33026	2T25022-M6-07	21	1
33027	2T25022-M6-07	25	1
33254	2T25022-M6-07	18	1
33260	2T25022-M6-07	20	1
35050	2T25022-M6-05	17	1
35250	2T25022-M6-05	37	3
35254	2T25022-M6-05	14	4
35262.1	2T25022-M6-05	21	1
35264	2T25022-M6-05	28	1
35503	2T25022-M6-05	19	1
40042	2T25022-M6-05	32	1
40075	2T25022-M6-05	31	1
40080	2T25022-M6-04	12	1

40212	2T25022-M6-08	31	1
40214	2T25022-M6-08	31	1
40245.21	2T25022-M6-05	20	1
40257	2T25020-M-06	14	1
40282	2T250FIEN21-M6-03	14	1
40283	2T25022-M6-05	25	1
40320	2T25022-M6-08	1	1
40321	2T25022-M6-08	2	1
40346	2T25020-M-09	12	1
40362	2T25020-M-09	23	1
40736	2T25022-M6-08	3	1
40737	2T25022-M6-08	11	1
40738	2T25022-M6-08	8	1
40739	2T25022-M6-08	4	1
40740	2T25022-M6-08	10	1
40741	2T25022-M6-08	12	1
40742	2T25022-M6-08	20	1
40743	2T25022-M6-08	13	1
40744.1	2T25022-M6-08	15	1
40745	2T25022-M6-08	16	1
40746	2T25022-M6-08	17	1
40747.1	2T25022-M6-08	14	1
43049	2T25022-M6-07	26	1
43250.03	2T25020-M-09	10	1
43250.19	2T25020-M-09	1	1
48059	2T25022-M6-08	21	1
48250	2T25022-M6-05	15	2
48252	2T25022-M6-08	18	1

2T250FIEN22-M -
MOTORE - ENGINE

48258	2T25022-M6-08	9	4
48259	2T25022-M6-08	6	1
49012	2T250FIEN21-M6-03	16	1
49044	2T25020-M-06	18	2
49045	2T25020-M-06	19	2
49056	2T25020-M-10	17	1
49060	2T25022-M6-05	16	1
49073	2T25022-M6-07	3	1
49100	2T25020-M-06	12	1
49103	2T25020-M-06	22	1
49119	2T25022-M6-04	20	1
49124	2T25019-M-02	12	1
49212	2T25022-M6-07	28	1
49215	2T25022-M6-04	14	1
49220	2T250FI22-M-01	19	1
49252	2T25022-M6-08	32	1
	2T250FIEN21-M6-03	15	1
49290	2T25020-M-10	22	1
49301	2T25020-M-06	21	1
49363	2T25020-M-06	11	1
49369	2T25020-M-09	2	1
49399	2T250FI22-M-01	10	1
49403	2T25022-M6-07	17	1
	2T25022-M6-08	33	1
49404	2T250FIEN21-M6-03	9	4
49414	2T25020-M-09	6	1

49440	2T25020-M-09	21	1
49472	2T25020-M-10	10	2
49474	2T25022-M6-05	36	1
49476	2T25022-M6-04	19	2
49477	2T25020-M-10	11	12
	2T25022-M6-04	2	3
	2T25022-M6-04	7	9
49478	2T25019-M-02	18	4
	2T25022-M6-04	22	2
49482	2T25022-M6-07	10	2
49484	2T25022-M6-05	34	6
49485	2T25020-M-10	1	2
	2T25022-M6-07	29	1
49486	2T25020-M-06	5	4
49487	2T25020-M-06	30	3
49490	2T25020-M-06	31	11
49503	2T250FI22-M-01	5	8
49508	2T25020-M-06	29	1
49535	2T25022-M6-05	30	2
49570	2T25022-M6-04	21	1
49580	2T25020-M-09	24	2
	2T25020-M-10	18	2
49601	2T25020-M-10	9	2
49603	2T25022-M6-08	23	1
49604	2T25022-M6-05	35	6
49613	2T25020-M-10	16	1
49615	2T25020-M-10	12	3
49630	2T250FI22-M-01	20	1

49632	2T25019-M-02	6	2
49676	2T250FI22-M-01	28	1
49713	2T25020-M-06	26	2
49727	2T25022-M6-05	22	8
49738	2T250FI22-M-01	22	1
49757	2T250FI22-M-01	17	1
49881	2T25019-M-02	13	1
49890	2T25019-M-02	3	1
49919	2T25019-M-02	17	3
49929	2T25019-M-02	7	1
49962	2T25020-M-06	15	1
	2T25022-M6-08	24	1
49969	2T25020-M-06	13	1
49973	2T25019-M-02	15	4
49981	2T25020-M-09	22	1
49984	2T25019-M-02	16	2
49986	2T25022-M6-04	1	2
49987	2T25020-M-09	18	1
51054	2T25020-M-06	3	2
68206	2T25020-M-10	2	1
68207	2T25020-M-10	6	1
72251	2T25019-M-02	8	2
72418.23	2T25020-M-10	5	1
F03379	2T25022-M6-08	25	1
F03381	2T25022-M6-07	15	1
F04363	2T25022-M6-04	15	1
F04365	2T25020-M-09	3	1
F08459	2T25020-M-06	25	1

2T250FIEN22-M -
MOTORE - ENGINE

F12301	2T25019-M-02	11	1
F12308	2T250FI22-M-01	12	1
F12321	2T25019-M-02	14	1
F12322	2T25020-M-10	21	1
F15478	2T25020-M-10	8	1
F15551	2T25020-M-10	14	1
F16428	2T25020-M-09	5	1
F16429	2T25020-M-09	16	1
F16444.4	2T25022-M6-05	6	1
F16447	2T25022-M6-07	31	1
F16453	2T25022-M6-05	7	6
F16469	2T25022-M6-07	8	2
F19504	2T25022-M6-07	14	1
F19510	2T25022-M6-05	26	1
F19517	2T25022-M6-05	3	1
F19524	2T25022-M6-08	5	5
F19533	2T25022-M6-07	22	3
F19536	2T250FI22-M-01	25	1
F21444	2T25019-M-02	23	2
F26304	2T25020-M-06	20	1
F26422	2T25022-M6-05	27	1
F26423	2T25020-M-09	4	1
F26424	2T25020-M-09	15	1
F26428	2T25020-M-06	27	1
F26479	2T25022-M6-07	32	1
F26587	2T25022-M6-07	5	1
F26588	2T25022-M6-07	6	1
F26589	2T25022-M6-07	13	1

F26592	2T25022-M6-07	7	2
F26620	2T25022-M6-07	9	1
F28657	2T25020-M-09	11	1
F28679	2T25022-M6-04	16	1
F30945	2T25020-M-10	19	1
F35559	2T25022-M6-05	5	1
F35582	2T25022-M6-05	12	1
F35589	2T25022-M6-05	13	8
F43376	2T25020-M-09	8	1
F48352	2T25022-M6-07	16	1
	2T25022-M6-08	34	1
F48354	2T25020-M-09	17	1
F48355	2T25020-M-09	13	1
F48401.30	2T25022-M6-08	26	1
F49835	2T25020-M-09	14	1
F49869	2T25022-M6-08	7	5
F49873	2T25022-M6-07	12	1
F49874	2T250FI22-M-01	8	4
F49876	2T25022-M6-08	36	1
F49915	2T25020-M-06	32	1
F49920	2T25022-M6-04	5	1
F49925	2T25022-M6-04	6	1
F49939	2T25020-M-09	19	1
F50816	2T25020-M-10	13	1